ICC-ES Evaluation Report

ESR-3726

Reissued October 2026

This report remains under an active continuous compliance program through the end of October 2027.

This report also contains:

- **City of Chicago Supplement**
- **City of LA Supplement**
- **City of NY Supplement**
- **CA Supplement**
- **FL Supplement**
- **OSSC Supplement**

ICC-ES Evaluation Reports are not to be construed as representing aesthetics or any other attributes not specifically addressed, nor are they to be construed as an endorsement of the subject of the report or a recommendation for its use. There is no warranty by ICC Evaluation Service, LLC, express or implied, as to any finding or other matter in this report, or as to any product covered by the report.

Copyright © 2026 ICC Evaluation Service, LLC. All rights reserved.

DIVISION: 31 00 00—EARTHWORK Section: 31 63 00—Bored Piles	REPORT HOLDER: GOLIATHTECH INCORPORATED	EVALUATION SUBJECT: GOLIATHTECH HELICAL PILE SYSTEMS	

1.0 EVALUATION SCOPE

Compliance with the following codes:

- 2024, 2021, 2018, 2015, 2012, and 2009 *International Building Code®* (IBC)
- 2024, 2021, 2018, 2015, 2012, and 2009 *International Residential Code®* (IRC)

Properties evaluated:

- Structural and geotechnical

2.0 USES

2.1 IBC:

GoliathTech Helical Pile Systems are used either to underpin foundations of existing structures or to form deep foundations for new structures; and are designed to transfer compression, tension and lateral loads from the supported structures to suitable soil bearing strata. Underpinning of existing foundations is generally achieved by attaching the helical piles to the underpinning brackets (Type A side-load brackets), which support compression loads only. Deep foundations for new construction are generally obtained by attaching the helical piles to new construction brackets (Type B direct-load brackets) that are embedded in concrete pile caps or grade beams, which support tension, compression and lateral loads.

2.2 IRC: Under the IRC, the GoliathTech Helical Pile Systems may be used as an alternate foundation system supporting light-frame construction, exterior porch deck, elevated walkway and stairway construction and accessory structures.

3.0 DESCRIPTION

3.1 General:

The GoliathTech helical pile systems consist of a helical pile and a bracket that allows for attachment to the supported structures. Each helical pile, consisting of a lead section and one or more extension sections, is screwed into the ground by application of torsion to a depth that conforms to project requirements for avoidance of unsatisfactory subsurface conditions and ensures a suitable soil or bedrock bearing stratum has been reached. The bracket is then installed to connect the pile to the concrete foundation of the supported structure.

3.2 System Components:

The GoliathTech helical pile systems include either a $2^3/_8$-inch (60 mm), $2^7/_8$-inch (73 mm) or 3½-inch (89 mm) outside diameter helical pile lead shaft (shaft with a helix or helices), extension shaft(s), and either an underpinning bracket or a new construction bracket, for attachment to concrete foundations. The lead shaft is connected to extension shaft(s) by couplings, as described in Section 3.2.3. The helical pile is connected to a foundation bracket, as described in Section 3.2.4.

3.2.1 Helical Pile Lead Shafts and Extensions: The GoliathTech helical pile lead and extensions are available in three different shaft sizes: $2^3/_8$-inch-outside-diameter (60 mm), $2^7/_8$-inch-outside-diameter (73 mm) or 3½-inch- outside-diameter (89 mm) round steel tubing. The $2^3/_8$-inch helical pile lead shafts consist of one helical-shaped circular steel plates factory-welded to the steel shaft. The $2^7/_8$-inch and 3½-inch helical pile lead shafts consist of one or more helical-shaped circular steel plates factory-welded to the steel shaft. The extension shafts are similar to the lead shafts, except that the extensions do not have helical plates. See Figure 1A and 1B of this report for helical lead and extension configurations. The depth of the helical piles in soil is typically extended by adding one or more steel shaft extensions that are mechanically connected together by steel couplings, to form one continuous steel pile.

The $2^3/_8$-inch-outside-diameter (60 mm) round steel tubing lead shaft and extension sections are available in 0.154-inch (3.9 mm) nominal wall thickness The $2^7/_8$-inch-outside-diameter (73 mm) and 3½-inch-outside-diameter (89 mm) round steel tubing lead shaft and extension sections are available in 0.25-inch (6.4 mm) nominal wall thickness. The helical lead shaft and extension sections come in the following lengths: 7 feet (2.13 m) lead section, 3 and 7 foot (0.91 and 2.13 m) extensions.

3.2.2 Helix Plates: Each circular, helical, steel bearing plate (helix) is split from the center to the outside edge with spiral edge geometry. Each helix is formed to a clockwise downward spiral with all radial sections normal to the shaft's central longitudinal axis ±3° and with a 3-inch nominal pitch. The pitch is the distance between the leading and trailing edges. The helices are factory fillet-welded to the pile shaft. Each helix plate is 0.375 inch (9.5 mm) thick and has an outer diameter of 9, 11,13, 15 or 17 inches (229, 279, 330, 381 or 432 mm). See Figure 1B for details.

3.2.3 Couplings: Holes are factory-drilled at each end of an extension section and at the upper end of the lead section, so as to allow the multiple shaft sections (between the lead and the extension section or between two extension sections) to be through-bolted together during the installation.

One end of each $2^3/_8$-inch-outside-diameter (60 mm), $2^7/_8$-inch- outside-diameter (73 mm) and 3½-inch-outside-diameter (89 mm) extension section has a steel coupler that consists of a pipe sleeve, factory-welded to the end of the extension, which allows the upper end of the lead shaft or the other end of an extension section to be snug-fitted into the welded coupler. The $2^3/_8$-inch-outside-diameter (60 mm) coupler sleeve is a round, hollow structural steel section, HSS2.875x0.1875, measuring 5 inches long (127 mm), and having a $2^7/_8$-inch (73 mm) outside diameter and a 0.1875 inch (4.8 mm) nominal wall thickness. The $2^7/_8$-inch-outside-diameter (73 mm) coupler sleeve is a round, hollow structural steel section, HSS3.5x0.250, measuring 5 inches long (127 mm), and having a $3^1/_2$-inch (89 mm) outside diameter and a 0.25 inch (6.4 mm) nominal wall thickness. The 3½-inch-outside-diameter (89 mm) coupler pipe sleeve is a round, hollow structural steel section, HSS4.00x0.188, measuring 6.375 inch long (162 mm), and having a 4-inch (102 mm) outside diameter and a 0.188 inch (4.8 mm) nominal wall thickness. Holes are factory drilled at each end of an extension section and at the upper end of the lead section, so as to allow multiple shaft sections to be through-bolted together during the installation. For the $2^3/_8$-inch-outside-diameter (60 mm) and $2^7/_8$-inch- outside-diameter (73 mm) helical piles, each coupling connection includes two $^1/_2$-inch-diameter (12.7 mm), 4.714-inch-long (120 mm), standard hex-head structural bolts, and two matching hex nuts. For 3½-inch- outside-diameter (89 mm) helical piles, each coupling connection includes three $^1/_2$-inch-diameter (12.7 mm), 5.214-inch-long (132 mm), standard hex-head structural bolts, and three matching hex nuts.

3.2.4 Brackets: The GoliathTech brackets are Type A (side-load) brackets as defined in Section 3.2.4.1 of this report and Type B (direct load) brackets as defined in Sections 3.2.4.2 through 3.2.4.6 of this report. Brackets.

3.2.4.1 GoliathTech Underpinning Bracket Assemblies: The GoliathTech Underpinning Bracket assemblies (GTUP278, GTUP278N, GTUP312, GTUP312N, GTUPHC278, and GTUPHC312) described in Tables 1A and 1B are for use with the $2^7/_8$-inch- outside-diameter (73 mm) and 3½-inch- outside-diameter (89 mm) helical piles and are used to transfer axial compressive loading only from existing concrete foundations to the helical piles. The bracket assemblies consist of a bracket subassembly and a lifting bolt plate assembly. For GTUP278, GTUP278N, GTUP312, GTUP312N, the bracket subassembly as shown in Figure 3 is factory-welded and is constructed from ¼-inch (6.4 mm) thick steel plates. The underpinning bracket seat measures 8.25 inches (210 mm) deep by 18 inches (457 mm) long. The lifting bolt plate assembly as

shown in Figure 3 is constructed from 1-inch (25.4 mm) thick lifting plates and two 1-inch (25.4 mm) threaded steel rods. The threaded steel rods are secure with matching nuts and washers. The brackets are available in bare steel or galvanized steel.

For GTUPHC278 and GTUPHC312 underpinning brackets, the bracket subassembly as shown in Figure 3 is factory-welded and is constructed from ¼-inch (6.4 mm) and 3/8-inch (9.5 mm) thick steel plates. The underpinning bracket seat is 13 inch-wide (330 mm) with 6-inch (152 mm) horizontal leg and 7.75-inch (197 mm) vertical leg. The lifting bolt plate assembly as shown in Figure 3 is constructed from two 1-inch (25.4 mm) thick lifting plates and two 1¼-inch (31.8 mm) threaded steel rods. The threaded steel rods are secured with matching nuts and washers. The bracket assemblies are anchored in foundations using two 3/4-inch (19.1 mm) x 7-inch (178 mm) Hilti Carbon Steel KB-TZ2 anchors as described in evaluation report ESR-4266. The bracket assemblies are attached to the helical piles using a 1-inch (25.4 mm) thick stabilization plate and a 1-inch (25.4 mm) thick re-usable plate unique to each of 2 brackets and two 5/8-inch (15.9 mm) bolts. The brackets are available in bare steel or galvanized steel.

3.2.4.2 GoliathTech New Construction Bracket Assemblies: The GoliathTech New Construction Bracket assemblies, for use with the $2^3/_8$-inch-outside-diameter (60 mm), $2^7/_8$-inch-outside-diameter (73 mm) and 3½-inch-outside-diameter (89 mm) helical piles, are used for embedment in cast-in-place concrete foundations to support axial compression, axial tension and lateral loads. Each new construction bracket consists of one bearing plate and one steel tube sleeve that are factory-welded together to form the bracket. The new construction brackets come in different sizes. See Table 1B for new construction bracket dimensions and configurations; and Figure 2 for typical details of the new construction brackets. The bolts used to connect the bracket sleeve to the helical shaft are ½-inch (12.7 mm) hex-head steel bolts and come with matching nuts. The brackets are available in bare steel or galvanized steel.

3.2.4.3 GoliathTech Flat Plate Welded to Sleeve Brackets: These brackets are used to support structural members in new and existing construction, and are for helical piles that support axial compression, axial tension and lateral loads. The brackets are composed of a flat steel plate factory welded to a steel pipe sleeve. The bracket comes with predrilled holes to allow for attachment of supported member. See Table 1B for bracket dimensions and configurations and Figure 1F for typical details. The bolts used to connect the bracket sleeve to the helical shaft are either: ½-inch (12.7 mm) hex-head steel through-bolts and come with matching nuts or ½-inch (12.7 mm) hex-head bolts connected to tapped holes on the sleeve in accordance with Section 4.4.3. The brackets are available in bare steel or galvanized steel.

3.2.4.4 GoliathTech U-Shape Plate Welded to Sleeve Brackets: These brackets are used to support structural members in new and existing construction, and are for helical piles that support axial compression, axial tension and lateral loads. The brackets are composed of a U-shape steel plate factory welded to a steel pipe sleeve. The bracket comes with predrilled holes to allow for attachment of supported member. See Table 1B for bracket dimensions and configurations and Figure 1G for typical details. The bolts used to connect the bracket sleeve to the helical shaft are either: ½-inch (12.7 mm) hex-head steel through-bolts and come with matching nuts or ½-inch (12.7 mm) hex-head bolts secured to tapped holes on the sleeve in accordance with Section 4.4.4. The brackets are available in bare steel or galvanized steel.

3.2.4.5 GoliathTech Flat Plate Welded to Threaded Rod: These brackets are used to support structural members in new and existing construction, and are for helical piles that support axial compression, axial tension and lateral loads. The brackets are composed of a flat steel plate factory welded to a steel threaded rod. A sleeve composed of round steel tubing with a factory-welded steel nut is used to connect the threaded rod to the top of the shaft. The plate comes with predrilled holes to allow for attachment of supported member. See Table 1B for bracket dimensions and configurations and Figure 1H for typical details. The bolts used to connect the bracket sleeve to the helical shaft must be installed in accordance with Section 4.4.5. The brackets are available in bare steel or galvanized steel.

3.2.4.6 GoliathTech U-Shape Steel Plate Welded to Threaded Rod: These brackets are used to support structural members in new and existing construction, and are for helical piles that support axial compression, axial tension and lateral loads. These brackets are composed of a U-shape steel plate factory-welded to a steel threaded rod. A sleeve composed of round steel tubing with a factory-welded steel nut is used to connect the threaded rod to the top of the shaft. The plate comes with predrilled holes to allow for attachment of supported member. See Table 1B for bracket dimensions and configurations and Figure 1I for typical details. The bolts used to connect the bracket sleeve to the helical shaft must be installed in accordance with Section 4.4.6. The brackets are available in bare steel or galvanized steel.

3.3 Material Specifications:

3.3.1 Helical Pile Lead Shafts and Extensions:

The shaft lead and extension of the $2^3/_8$-inch-outside-diameter (60 mm), $2^7/_8$-inch- outside-diameter (73 mm) and 3½-inch- outside-diameter (89 mm) helical piles sections are made from carbon steel round structural

tubes that conform to ASTM A500, Grade C, except having a minimum yield strength of 60 ksi (414 MPa) and minimum tensile strength of 70 ksi (483 MPa). The shafts and extensions are available in bare steel and hot-dipped galvanized in accordance with ASTM A123.

3.3.2 Helix Plates:

The helix plates of the $2^3/_8$-inch-outside-diameter (60 mm), $2^7/_8$-inch- outside-diameter (73 mm) and 3½-inch-outside-diameter (89 mm) helical piles are made from high strength low alloy steel complying with CSA G40.21 50W having a minimum yield strength of 60 ksi (414 MPa) and a minimum tensile strength of 70 ksi (483 MPa). The helix plates and the shafts to which they are factory-welded are available in bare steel and may also be hot-dipped galvanized as assemblies in accordance with ASTM A123.

3.3.3 Coupling:

The coupling sleeves of the $2^3/_8$-inch-outside-diameter (60 mm), $2^7/_8$-inch- outside-diameter (73 mm) and 3½-inch- outside-diameter (89 mm) helical pile extensions are made from carbon steel round structural tubes that conform to ASTM A500, Grade C, except having a minimum yield strength of 60 ksi (414 MPa) and minimum tensile strength of 70 ksi (483 MPa). The sleeves can be bare or hot-dipped galvanized as welded assemblies in accordance with ASTM A123. The bolts used in with the couplings conform to SAE J429, Grade 5, with threads excluded from the shear planes. The matching hex nuts conform to SAE J995, Grade 5. The bolts and nuts may be bare or hot-dipped galvanized in accordance with ASTM A153.

3.3.4 GoliathTech Underpinning Bracket Assemblies:

The steel plates conform to CSA G40.21 50W having a minimum yield strength of 60 ksi (414 MPa) and a minimum tensile strength of 70 ksi (483 MPa). The steel tubes conform to ASTM A500, Grade C, except having a minimum yield strength of 60 ksi (414 MPa) and minimum tensile strength of 70 ksi (483 MPa). The 1-inch (25.4 mm) threaded rods conform to SAE J429, Grade 5 with matching nuts conforming to SAE J995, Grade 5 and steel washers conforming to ASTM F436. The 1¼-inch (31.8 mm) threaded steel rods conform to ASTM A307, Grade A with matching nuts conforming to ASTM A563, Grade DH. The $^5/_8$-inch (15.9 mm) bolts conform to SAE J429, Grade 5 having a minimum yield strength of 92 ksi (643 MPa) and a minimum tensile strength of 120 ksi (827 MPa). The welded assembly can be bare steel or may be hot-dipped galvanized in accordance with ASTM A123.

3.3.5 GoliathTech New Construction Brackets:

The bearing plates conform to CSA G40.21 50W having a minimum yield strength of 60 ksi (414 MPa) and a minimum tensile strength of 70 ksi (483 MPa). The sleeves conform to ASTM A500, Grade C, except having a minimum yield strength of 60 ksi (414 MPa) and minimum tensile strength of 70 ksi (483 MPa). The bolts conform to SAE J429, Grade 5 with matching hex nuts conforming to SAE J995, Grade 5. The new construction brackets come in bare or may be hot-dipped galvanized in accordance with ASTM A123. When the bracket is hot-dipped galvanized, the bolt and nut must be hot-dipped galvanized in accordance with ASTM A153.

3.3.6 GoliathTech Flat Plate Welded to Sleeve Brackets:

The flat plates conform to CSA G40.21 50W having a minimum yield strength of 60 ksi (414 MPa) and a minimum tensile strength of 70 ksi (483 MPa). The sleeves conform to ASTM A500, Grade C, except having a minimum yield strength of 60 ksi (414 MPa) and minimum tensile strength of 70 ksi (483 MPa). The bolts conform to SAE J429, Grade 5 with matching hex nuts conforming to SAE J995, Grade 5. The brackets come in bare or may be hot-dipped galvanized in accordance with ASTM A123. When the bracket is hot-dipped galvanized, the bolt and nut must be hot-dipped galvanized in accordance with ASTM A153.

3.3.7 GoliathTech U-shape Plate Welded to Sleeve Brackets:

The U-shape plates are bent from steel conforming to CSA G40.21 50W having a minimum yield strength of 60 ksi (414 MPa) and a minimum tensile strength of 70 ksi (483 MPa). The sleeves conform to ASTM A500, Grade C, except having a minimum yield strength of 60 ksi (414 MPa) and minimum tensile strength of 70 ksi (483 MPa). The bolts conform to SAE J429, Grade 5 with matching hex nuts conforming to SAE J995, Grade 5. The brackets come in bare or may be hot-dipped galvanized in accordance with ASTM A123. When the bracket is hot-dipped galvanized, the bolt and nut must be hot-dipped galvanized in accordance with ASTM A153.

3.3.8 GoliathTech Flat Plate Welded to Threaded Rod Brackets:

The flat plates are made from steel conforming to CSA G40.21 50W having a minimum yield strength of 60 ksi (414 MPa) and a minimum tensile strength of 70 ksi (483 MPa). The threaded rod conforms to ASTM A325 having a minimum yield strength of 92 ksi (MPa) and a minimum ultimate tensile strength of 120 ksi (MPa). The sleeves conform to ASTM A500, Grade C, except having a minimum yield strength of 60 ksi (414 MPa)

and minimum tensile strength of 70 ksi (483 MPa). The nut welded to the sleeve is made from steel conforming to CSA G40.21 50W having a minimum yield strength of 60 ksi (414 MPa) and a minimum tensile strength of 70 ksi (483 MPa). The bolts conform to SAE J429, Grade 5. The brackets come in bare or may be hot-dipped galvanized in accordance with ASTM A123. When the bracket is hot-dipped galvanized, the bolt and nut must be hot-dipped galvanized in accordance with ASTM A153.

3.3.9 GoliathTech U-Shape Steel Plate Welded to Threaded Rod Brackets:

The U-shape plates are bent from steel conforming to CSA G40.21 50W having a minimum yield strength of 60 ksi (414 MPa) and a minimum tensile strength of 70 ksi (483 MPa). The threaded rod conforms to ASTM A325 having a minimum yield strength of 92 ksi (MPa) and a minimum ultimate tensile strength of 120 ksi (MPa). The sleeve conforms to ASTM A500, Grade C, except having a minimum yield strength of 60 ksi (414 MPa) and minimum tensile strength of 70 ksi (483 MPa). The nut welded to the sleeve is made from steel conforming to CSA G40.21 50W having a minimum yield strength of 60 ksi (414 MPa) and a minimum tensile strength of 70 ksi (483 MPa). The bolts connecting sleeve to shaft conform to SAE J429, Grade 5. The brackets come in bare or may be hot-dipped galvanized in accordance with ASTM A123. When the bracket is hot-dipped galvanized, the bolt and nut must be hot-dipped galvanized in accordance with ASTM A153.

4.0 DESIGN AND INSTALLATION

4.1 Design:

4.1.1 General: Engineering calculations (analysis and design) and drawings, prepared by a registered design professional, must be submitted to and approved by the code official for each project, and must be based on accepted engineering principles, as described in IBC Section 1604.4, and must conform to IBC Section 1810. Under the IRC, the registered design professional must design the helical pile system and devices, including the bracket, used as a foundation element. The applied loads must not exceed the published capacities shown in this report for the helical pile system and devices. The registered design professional may determine the design forces in accordance with IRC Section R301, or as an alternate in accordance with IBC provisions. The engineering analysis must address the helical foundation system performance related to structural and geotechnical requirements. The calculations must address the ability (considering strength and stiffness) of the supported foundation and structure to transmit the applied loads to the helical foundation system and the ability of the helical piles and surrounding soils to support the loads applied by the supported foundation and structure. The design method for the steel components is either the Load and Resistance Factor Design (LRFD), or the Allowable Strength Design (ASD), described in IBC Section 1602 and AISC 360 Section B3. The design method for the concrete components is the Strength Design (also called LRFD) described in IBC Section 1602 and ACI 318. The design method for soils is the ASD prescribed in IBC Sections 1802 (1801.2 of the 2015, 2012, and 2009 IBC) and 1602.

The structural analysis must consider all applicable internal forces (axial forces, shears, bending moments and torsional moments, if applicable) due to applied loads, eccentricity between applied loads and reactions acting on the pile-supported structure, the forces/moments exerted on the concrete foundations by the GoliathTech brackets, and the design span(s) between helical foundations.

The effects of the structural eccentricity, including the reactions (forces and moments) exerted by the bracket to the pile-supported structures, vary with application, and must be included in the structural analysis by a registered design professional. The result of this analysis and the structural capacities must be used to select a helical foundation system.

The minimum pile embedment into soil for various loading conditions must be determined based on the most stringent requirements of the following: engineering analysis; tested conditions and specified minimum pile embedment described in this report; the site-specific geotechnical investigation report; and site-specific load tests, if applicable.

The strengths (capacities) of the GoliathTech helical foundation components (bracket, shaft, helix and soil), including ASD allowable strength and LRFD strength, as described in IBC Section 1602 and AISC 360 Section B3, are included in this evaluation report. The bracket capacities are listed in Tables 1A and 1C through 1I; shaft capacities are listed in Tables 3A 3B and 3C; helix capacities are listed in Table 4; and soil capacities are described in Section 4.1.5, below and Table 5.

The geotechnical analysis must address the suitability of the helical foundation system for the specific project. It must also address the center-to-center spacing of the helical pile, considering both effects on the supported foundation and structure and group effects on the pile-soil capacity. The analysis must include estimates of the axial tension and/or compression capacities of the helical piles, whatever is relevant for the project, and the expected total and differential foundation movements due to single pile or pile group, as applicable.

A site-specific geotechnical investigation report must be submitted to the code official as part of the required submittal documents, prescribed in IBC Section 107, at the time of the permit application. Under the IRC, a

site-specific soil investigation report is not required if the helical pile system described in this evaluation report is being installed to support IRC structures defined in Section 2.2 of this report and the soil capacity of the helical pile must be established in accordance with Equation 3 in Section 4.1.4 of this report. The site-specific geotechnical investigation report must include, but not be limited to, the following information:

1. A plot showing the location of the soil investigation.
2. A complete record of the soil boring and penetration test logs and soil samples.
3. A record of soil profile.
4. Information on groundwater table, frost depth and corrosion-related parameters, as described in Section 5.5 of this report.
5. Soil properties, including those affecting the design such as support conditions of the piles.
6. Soil design parameters, such as shear strength parameters as required by Section 4.1.5; soil deformation parameters; and relative pile support conditions as defined in IBC Section 1810.2.1.
7. Recommendations for design criteria, including but not limited to: mitigations of effects of differential settlement and varying soil strength; and effects of adjacent loads.
8. Field inspection and reporting procedures (to include procedures for verification of the installed bearing capacity when required).
9. Load test requirements.
10. Any questionable soil characteristics and special design provisions, as necessary.

The allowable axial compressive or tensile load of the helical pile system must be based on the least of the following in accordance with IBC Section 1810.3.3.1.9:

- P1: Allowable axial capacity of the bracket. Section 4.1.2 of this report includes bracket capacities.
- P2: Allowable axial capacity of pile shaft. Section 4.1.3 of this report includes pile shaft capacities.
- P3: Sum of the allowable axial capacity of helical bearing plates affixed to pile. Section 4.1.4 of this report includes helical plate axial capacities.
- P4: Allowable capacity determined from well-documented correlations with installation torque. Section 4.1.5 of this report includes torque correlation factors used to establish pile axial load capacities based on documented correlations.
- P4: Sum of the areas of the helical bearing plates times the ultimate bearing capacity of the soil or rock comprising the bearing stratum divided by a safety factor of 2. This capacity will be determined by a registered design professional based on site-specific soil conditions. Under the 2024 and 2021 IBC, the axial capacity also includes the shaft resistance. The shaft resistance is equal to the area of the shaft above the uppermost helical bearing plate times the ultimate skin resistance.
- P4: Allowable capacity predicted by dividing the ultimate capacity determined from load tests by a safety factor of at least 2.0. This capacity will be determined by a registered design professional for each site-specific condition. Under the 2024 and 2021 IBC, the load tests must comply with 2024 and 2021 IBC Section 1810.3.3.1.2.

4.1.2 Bracket Capacity (P1): Table 1A includes underpinning bracket capacities and Tables 1C through 1I include new construction bracket capacities. The connections of the building structure to the helical pile brackets must be designed and included in the construction documents. The concrete foundation must be designed and justified to the satisfaction of the code official with due consideration to the eccentricity of applied loads, including reactions provided by the brackets, acting on the concrete foundation. Only localized limit states of steel and supporting concrete foundation, including punching shear and bearing, have been considered in this evaluation report. Other limit states are outside the scope of this evaluation report and must be determined by the registered design professional. The effects of reduced lateral sliding resistance due to uplift from wind or seismic loads must be considered for each project.

4.1.3 Shaft Capacity (P2): Tables 3A, 3B and 3C provide shaft capacities, including coupling, and Tables 2A, 2B and 2C provide the mechanical properties. The top of shafts must be braced as prescribed in IBC Section 1810.2.2, and the supported foundation structures such as concrete footings and concrete pile caps are assumed to be adequately braced such that the supported foundation structures provide lateral stability for the pile systems. In accordance with IBC Section 1810.2.1, any soil other than fluid soil must be deemed to afford sufficient lateral support to prevent buckling of the systems that are braced, and the unbraced length is defined as the length of piles that is standing in air, water or in fluid soils plus an additional 5 feet (1524 mm) when embedded into firm soil or an additional 10 feet (3048 mm) when embedded into soft soil. Firm soil must be defined as any soil with a Standard Penetration Test blow count of five or greater. Soft soil must be defined as any soil with a Standard Penetration Test blow count greater than zero and less than five.

Fluid soils must be defined as any soil with a Standard Penetration Test blow count of zero [weight of hammer (WOH) or weight of rods (WOR)]. Standard Penetration Test blow count must be determined in accordance with ASTM D1586. Under the IRC, when helical pile shafts are fully embedded into soil conditions defined in IRC Table R401.4.1, the helical shafts are deemed adequately supported to prevent buckling. The shaft capacity of the helical foundation systems in air, water or fluid soils must be determined by a registered design professional using parameters in Tables 2A, 2B and 2C with due consideration of lateral support provided by the surrounding soil and/or structure.

The elastic shortening/lengthening of the pile shaft will be controlled by the strength and section properties of the shaft sections and coupler(s). For loads up to and include the allowable load limits found in this report, the elastic shortening/lengthening of a shaft can be estimated as:

$\Delta_{shaft} = P\ L/(A\ E)$

where:

Δ_{shaft} = Length change of shaft resulting from elastic shortening/lengthening, in (mm).

P = applied axial load, kip (kN).

L = effective length of the shaft, in. (mm).

A = cross-sectional area of the shaft, see Tables 2A, 2B and 2C, in.^{2} (mm^2).

E = Young's modulus of the shaft, see Table 2A, 2B and 2C, ksi (MPa).

The slip of the helical pile coupler is 0.161-inch/coupler (4.1 mm/coupler) for 2$^3/_8$-inch (60 mm) diameter, 2$^7/_8$-inch (73 mm) diameter and 3½-inch (89 mm) diameter bare steel shafts and 0.131-inch/coupler (3.3 mm/coupler) for 2$^3/_8$-inch (60 mm) diameter, 2$^7/_8$-inch (73 mm) diameter and 3½-inch-diameter (89 mm) galvanized steel shafts at rated allowable compression/tensile load per coupling.

4.1.4 Helix Plate Capacity (P3): The helix compression and tension load capacities (P3) are listed in Table 4. For helical piles with more than one helix, the helix capacity, P3, for the helical foundation system, may be taken as the sum of the least capacity of each individual helix.

4.1.5 Soil Capacity (P4): The design axial compressive and tensile load capacities of helical piles based on soil resistance (P4) must be determined by a registered design professional in accordance with a site-specific geotechnical report, as described in Section 4.1.1, combined with the individual helix bearing method (Method 1), or from field loading tests conducted under the supervision of a registered design professional (Method 2). For either Method 1 or Method 2, the predicted axial load capacities must be confirmed during the site-specific production installation, such that the axial load capacities predicted by the torque correlation method must be equal to or greater than that predicted by Method 1 or 2, described above.

The individual bearing method is determined as the sum of the individual areas of the helical bearing plates times the ultimate bearing capacity of the soil or rock comprising the bearing stratum.

The design allowable axial load must be determined by dividing the total ultimate axial load capacity predicted by either Method 1 or 2, above, divided by a safety factor of at least 2.

The torque correlation method must be used to predict the ultimate capacity (Q_{ult}) of the pile and the minimum installation torque (Equation 1). A factor of safety of 2 must be applied to the ultimate capacity to determine the allowable soil capacity (Q_{all}) of the pile (Equation 2). Under the IRC, if the helical pile system is being installed to support structures governed by the IRC as defined in Section 2.2 of this evaluation report, and a site-specific geotechnical investigation report is not available, a safety factor of 2.5 must be used with the torque correlation method in lieu of Methods 1 or 2 to determine the allowable soil capacity of the pile (Equation 3).

$Q_{ult} = K_t T$ (Equation 1)

$Q_{all} = 0.5\ Q_{ult}$ (Equation 2)

$Q_{all} = 0.4\ Q_{ult}$ (Equation 3)

where:

Q_{ult} = Ultimate axial compressive or tensile capacity (lbf or N) of helical pile, which must be limited to the maximum ultimate values noted in Table 5.

Q_{all} = Allowable axial compressive or tensile capacity (lbf or N) of helical pile, which must be limited to the maximum ultimate values noted in Table 5.

K_t = Torque correlation factors are described in Table 5.

T = Final installation torque in (ft-lbf or N-m). The final installation torque is defined as the average of the last three readings recorded at one-foot (305 mm) intervals taken during the pile installation, using, for example, the torque reading instruments connected to the installation equipment.

4.1.6 Allowable Lateral Soil Capacity: The allowable lateral soil capacity is 882 lbf (3.92 kN) for $2^7/_8$-inch (73 mm) diameter helical piles and 1,026 lbf (4.56 kN) for $3^1/_2$-inch (89 mm) diameter helical piles. It is based on field testing of the helical piles with 9- and 13-inch helical plates installed in a firm clay soil, having an average standard penetration test blow count of 20, at a minimum embedment of 15 feet (4.57 m). The allowable lateral soil capacity is 1057 lbf (4.70 kN) for $2^3/_8$-inch-outside-diameter (60 mm) helical piles. It is based on field testing of the helical piles with 9-inch helical plates installed in a firm clay soil, having an average standard penetration test blow count of 20, at a minimum embedment of 16 feet (4.9 m). For soil conditions other than firm clay, the lateral capacity of the pile must be determined by a registered design professional.

4.2 Installation: The GoliathTech Helical Pile Systems must be installed by certified and trained installers approved by GoliathTech Incorporated. The GoliathTech Helical Pile Systems must be installed in accordance with this section (Section 4.2); IBC Section 1810.4.11; the manufacturer's published installation instructions; and approved site-specific construction documents. In case of a conflict, the most stringent requirement governs.

4.3 Helical Pile Installation: The helical piles must be installed and located in accordance with the approved plans and specifications. The helical piles are typically installed rotary type, hydraulic power driven motor with clockwise and counter-clockwise rotation capabilities, as recommended by GoliathTech, Inc. In conjunction with rotating the pile, the equipment shall be capable of applying down pressure (crowd) to suit project soil conditions and load requirements. The helical pile sections shall be engaged and advanced into the soil in a smooth, continuous manner at a rate of rotation of 5 to 20 revolutions per minute. The installation torque must not exceed the maximum installation torque rating, as described in Table 5. The installation torque is the average of the last three readings recorded at one-foot (305 mm) intervals. Helical piles must be installed vertically into the ground with a maximum allowable angle of inclination of ±1 degree from vertical. The helical piles must be rotated clockwise in a continuous manner with the lead shaft section advancing at the helix pitch. Extensions are selected based on the approved plans as specified per the site conditions by a registered design professional. The extensions and the lead shaft section must be connected by the use of the designed number of coupling bolts and nuts as described in Section 3.2.3. Coupling bolts must be snug-tightened as defined in Section J3 of AISC 360. The final installation torque must equal or exceed that specified by the torque correlation method. The helical piles must be installed to the minimum depth described in the approved plans, but with the helical plate not less than 5 feet (1.53 m) below the bottom of the supported concrete foundation. For tension application, when designing to the full geotechnical capacity, the helical pile must be installed such that the minimum depth from the ground surface to the uppermost helix is 12D, where D is the diameter of the largest helix.

4.4 Foundation Attachments:

4.4.1 Underpinning Bracket: The underpinning bracket must be installed as specified in the approved plans. The underpinning bracket is installed by excavating the bottom of the footing or foundation and large enough to provide access for bracket installation. The face and underside of the footing for the bracket bearing plate should be flat. Existing concrete footing capacity must not be altered, such as with notching of concrete or cutting of reinforcing steel, without the approval of the registered design professional and the code official. The underpinning bracket is installed over the pile shaft, away from the concrete footing. The bracket is rotated into place under the footing and raised into position. The footing face and underside should be fully bearing on the bracket plate. Place non-shrink grout in any small voids between bracket seat and concrete footing. The pile shaft is cut off squarely at least 5 inches (127 mm) up from bottom of footing. This may change depending on the amount of lift. All field-cut or drilled pilings may be protected from corrosion as recommended by the registered design professional and approved by the code official. The lifting plate with lifting jacks is installed over the pile shaft, and threaded rods, nuts and washers are added to hold the bracket in position. The installation fixture is attached to raise the foundation to the desired elevation. Any lifting of the existing structure must be verified by a registered design professional and is subject to approval of the code official to ensure that the foundation, superstructure, and helical piles are not overstressed. Once the foundation has been raised to its desired elevation and the hex nuts over the lifting plate are tightened, then the installation fixture and lifting jacks are removed. The threaded-rod nuts must be snug-tightened as defined in Section J3 of AISC 360. The excavation must be backfilled in accordance with IBC Section 1804.

4.4.2 New Construction Bracket: New construction brackets must be placed over the top of the helical pile shaft. The top of pile elevation must be established and must be consistent with the specified elevation. If necessary, the top of the pile may be cut off level to the required length in accordance with the manufacturer's instructions and AISC 360 requirements so as to ensure full, direct contact (bearing) between the top of the pile shaft and the bracket. All field-cut or drilled pilings may be protected from corrosion as recommended by the registered design professional and approved by the code official. For new construction brackets as shown in Table 1B require two or three, $^1/_2$-inch-diameter (12.7 mm) bolts and matching nuts as described in Section 3.3.5 of this report for helical piles resisting tension forces. The bolts must be snug-tightened as defined

in Section J3 of AISC 360. The embedment and edge distance of the bracket into the concrete foundation must be as described in the approved plans and as indicated in Tables 1C, 1D or 1E, as applicable, of this report. The concrete foundation must be cast around the bracket in accordance with the approved construction documents.

4.4.3 Flat Steel Plate Welded to Sleeve Brackets: These brackets must be placed over the top of the helical pile shaft. The top of pile elevation must be established and must be consistent with the specified elevation. If necessary, the top of the pile may be cut off level to the required length in accordance with the manufacturer's instructions and AISC 360 requirements so as to ensure full, direct contact (bearing) between the top of the pile shaft and the bracket. All field-cut or drilled pilings may be protected from corrosion as recommended by the registered design professional and approved by the code official. Brackets with 2-inch-high sleeve as shown in Table 1B, require that the adaptor connection to the shaft is done with two (2) ½-inch-diameter bolts complying with Section 3.3.6 of this report. Bolts are secured using two (2) pre-tapped sleeve holes. Each bolt must be bearing fully with the helical pile shaft wall. The bolts must be snug-tightened as defined in Section J3 of AISC 360. For other brackets shown in Table 1B require two or three, $^1/_2$-inch-diameter (12.7 mm) through-bolts and matching nuts as described in Section 3.3.6 of this report for helical piles resisting tension forces. The bolts must be snug-tightened as defined in Section J3 of AISC 360. Connection of supported member must comply with Table 1F of this report.

4.4.4 U-Shape Steel Plate Welded to Sleeve Brackets: These brackets must be placed over the top of the helical pile shaft. The top of pile elevation must be established and must be consistent with the specified elevation. If necessary, the top of the pile may be cut off level to the required length in accordance with the manufacturer's instructions and AISC 360 requirements so as to ensure full, direct contact (bearing) between the top of the pile shaft and the bracket. All field-cut or drilled pilings may be protected from corrosion as recommended by the registered design professional and approved by the code official. Brackets with 2-inch-high sleeve as shown in Table 1B, require that the adaptor connection to the shaft is done with two (2) ½-inch-diameter bolts complying with Section 3.3.7 of this report. Bolts are secured using two (2) pre-tapped sleeve holes. Each bolt must be bearing fully with the helical pile shaft wall. The bolts must be snug-tightened as defined in Section J3 of AISC 360. For other brackets shown in Table 1B require two or three, $^1/_2$-inch-diameter (12.7 mm) through-bolts and matching nuts as described in Section 3.3.7 of this report for helical piles resisting tension forces. The bolts must be snug-tightened as defined in Section J3 of AISC 360. Connection of supported member must comply with Table 1G of this report.

4.4.5 Flat Steel Plate Welded to Threaded Rod Adjustable Brackets: The threaded rod adaptor must be placed over the top of the helical pile shaft. The top of pile elevation must be established and must be consistent with the specified elevation. If necessary, the top of the pile may be cut off level to the required length in accordance with the manufacturer's instructions and AISC 360 requirements so as to ensure full, direct contact (bearing) between the top of the pile shaft and the adaptor. All field-cut or drilled pilings may be protected from corrosion as recommended by the registered design professional and approved by the code official. The adaptor connection to the shaft is done with two (2) ½-inch-diameter bolts complying with Section 3.3.8 of this report. Bolts are secured using two (2) pre-tapped sleeve holes. Each bolt must be bearing fully with the helical pile shaft wall. The bolts must be snug-tightened as defined in Section J3 of AISC 360. The threaded rod is threaded to the adaptor nut and adjusted to the desired height and locked with a matching nut. Connection of supported member must comply with Table 1H of this report.

4.4.6 U-Shape Steel Plate Welded to Threaded Rod Adjustable Brackets: The threaded rod adaptor must be placed over the top of the helical pile shaft. The top bracket elevation must be established and must be consistent with the specified elevation by adjusting threaded rod at required deployed length. All field-cut or drilled pilings may be protected from corrosion as recommended by the registered design professional and approved by the code official. The adaptor connection to the shaft is done with two (2) ½-inch-diameter bolts complying with Section 3.3.9 of this report. Bolts are secured using two (2) pre-tapped sleeve holes. Each bolt must be bearing fully with the helical pile shaft wall. The bolts must be snug-tightened as defined in Section J3 of AISC 360. The threaded rod is threaded to the adaptor nut and adjusted to the desired height and locked with a matching nut. Connection of supported member must comply with Table 1I of this report.

4.5 Special Inspections:

4.5.1 IBC:

Special inspections in accordance with Section 1705.9 of the 2024, 2021, 2018, 2015 and 2012 IBC (Section 1704.10 of the 2009 IBC) must be performed continuously during installation of the GoliathTech helical pile system (piles and brackets). Items to be recorded and confirmed by the special inspector must include, but are not necessarily limited to, the following:

1. Verification of the product manufacturer and the manufacturer's certification of installers.
2. Verification of product types and configurations for lead sections, extension sections, underpinning and new construction bracket assemblies, bolts/threaded rods, and nuts and washers as specified in the construction documents and this evaluation report.
3. Installation procedures for helical pile shaft, installation equipment used, and the GoliathTech Inc. installation instructions.
4. Anticipated and actual piling depth.
5. Required target installation torque of piles and depth of the helical foundation system.
6. Inclination and position of helical piles; top of pile extension in full contact with bracket; tightness of all bolts; and evidence that the helical pile foundation systems are installed by an approved GoliathTech Inc. installer.
7. Other pertinent installation data as required by the registered professional in responsible charge and compliance of installation with the approved geotechnical investigation report, construction documents, and this evaluation report.
8. Where on-site welding is required, special inspection in accordance with Section 1705.2 of the 2024, 2021, 2018, 2015 and 2012 IBC (Section 1704.3 of the 2009 IBC) must be conducted.

4.5.2 IRC:

Continuous special inspection of helical pile system and devices installed under the provisions of the IRC defined in this report is not required.

5.0 CONDITIONS OF USE:

The GoliathTech Helical Pile Systems described in this report comply with, or are suitable alternatives to what is specified in, the codes indicated in Section 1.0 of this report, subject to the following conditions:

5.1 The GoliathTech helical pile systems are manufactured, identified and installed in accordance with this report, the approved construction documents (engineering drawings and specifications), and the manufacturer's written installation instructions, which must be available at the jobsite at all times during installation. In case of a conflict, the most stringent requirement governs.

5.2 The GoliathTech helical pile systems may be used to support structures assigned to Seismic Design Categories (SDCs) A through F in accordance with the IBC; and SDCs A through C; D through D2; and E in accordance with the IRC. Anchorage must be addressed by the registered design professional for each site in accordance with Section 5.3 of this report and subject to approval by code official.

5.3 When installed in Seismic Design Categories D, E and F under the IBC; and D through D2 and E under the IRC, the following conditions must be considered:

a. The strength of the top bracket connection to the shaft and to the foundation of the structure shall comply with IBC Section 1810.3.11.2 and must not exceed the published capacities noted in Section 4.1.1 of this report.

b. The shaft seismic flexural length must be determined by registered design professional in accordance with applicable code sections of the IBC. The shaft seismic flexural length is defined as the length of the shaft equal to 120 percent of the shaft flexural length.

c. The shaft couplers shall be limited to the shaft capacity reported in Section 4.1.2 of this report and must comply with the requirements in IBC Section 1810.3.6.1.

d. The analysis of the seismic forces imparted on the bracket, bracket connection to foundation and pile must be prepared by a registered design professional taking into account soil characteristics such as liquefiable zone, length of pile in air or length of fluid conditions per the appropriate code.

5.4 Installations of the helical foundation systems are limited to regions of normal-weight concrete members where analysis indicates no cracking will occur at service load levels.

5.5 All brackets (underpinning and new construction) must be used only to support structures that are laterally braced as defined in IBC Section 1810.2.2. Shaft couplings must be located within firm or soft soil as defined in Section 4.1.3.

5.6 Use of the helical foundation systems in exposure conditions to soil that are indicative of potential pile corrosion situation as defined by the following: (1) soil resistivity less than 1,000 ohm-cm; (2) soil pH less than 5.5; (3) soils with high organic content; (4) soil sulfate concentrations greater than 1,000 ppm; (5) soils located in a landfill, or (6) soil containing mine waste; is beyond the scope of this evaluation report.

5.7 Zinc-coated steel and bare steel components must not be combined in the same system, except where the sacrificial thickness for the zinc-coated components is taken as that for bare steel components (0.036-inch

or 915 µm). All helical foundation components must be galvanically isolated from concrete reinforcing steel, building structural steel, or any other metal building components.

5.8 The helical piles must be installed vertically into the ground with a maximum allowable angle of inclination of 1 degree from vertical. To comply with the requirements found in IBC Section 1810.3.1.3, the superstructure must be designed to resist the effects of helical pile eccentricity.

5.9 Special inspection is provided in accordance with Section 4.5 of this report.

5.10 Engineering calculations and drawings, in accordance with recognized engineering principles as described in IBC Section 1604.4, and complying with Section 4.1 of this report, are prepared by a registered design professional and approved by the code official.

5.11 The adequacy of the concrete structures that are connected to the brackets must be verified by a registered design professional, in accordance with applicable code provisions, and is subject to the approval of the code official.

5.12 A site-specific geotechnical investigation report for each project site must be provided to the code official for approval in accordance with Section 4.1.1 of this report under the IBC.

5.13 When using the alternative basic load combinations prescribed in IBC Section 1605.2 (Section 1605.3.2 of the 2018, 2015, 2012, and 2009 IBC), the allowable stress increases permitted by material chapters of the IBC or the referenced standards are prohibited.

5.14 In order to avoid group efficiency effects, an analysis prepared by a registered design professional must be submitted where the center-to-center spacing of axially loaded helical piles is less than three times the diameter of the largest helix plate at the depth of bearing. An analysis prepared by a registered design professional must also be submitted where the center-to-center spacing of laterally loaded helical piles is less than eight times the least horizontal dimension of the pile shaft at the ground surface. For laterally loaded piles, spacing between helical plates must not be less than 3D, where D is the diameter of the largest helical plate measured from the edge of the helical plate to the edge of the helical plate of the adjacent helical pile; or 4D, where the spacing is measured from the center-to-center of the adjacent helical pile plates.

5.15 Settlement of helical piles is beyond the scope of this evaluation report and must be determined by a registered design professional as required in IBC Section 1810.2.3.

5.16 The applied loads must not exceed the capacities described in Section 4.1 of this report.

5.17 The GoliathTech helical pile systems are manufactured by GoliathTech, Inc., located in Quebec, Canada; under a quality control program with inspections by ICC-ES.

6.0 EVIDENCE SUBMITTED

Data in accordance with the ICC-ES Acceptance Criteria for Helical Pile Systems and Devices AC358 (24a), published April 2025.

7.0 IDENTIFICATION

7.1 The ICC-ES mark of conformity, electronic labeling, or the evaluation report number (ICC-ES ESR-3726) along with the name, registered trademark, or registered logo of the report holder must be included in the product label.

7.2 In addition, the GoliathTech helical pile systems are identified with the company's address, the product model number, and product description.

7.3 The report holder's contact information is the following:

GOLIATHTECH INCORPORATED
477 POIRIER BLVD.
MAGOG, QUEBEC J1X 7L1
CANADA
(855) 743-4777
www.goliathtechpiles.com

TABLE 1A—COMPRESSION CAPACITY (P1) FOR UNDERPINNING BRACKETS [1,2,6]

PRODUCT NUMBER	STEEL TYPE	SHAFT DIAMETER (inches)	DESIGN COMPRESSION CAPACITY (kips)					
			MINIMUM CONCRETE COMPRESSIVE STRENGTH 2,500 psi		MINIMUM CONCRETE COMPRESSIVE STRENGTH 3,000 psi		MINIMUM CONCRETE COMPRESSIVE STRENGTH 4,000 psi	
			ASD	LRFD	ASD	LRFD	ASD	LRFD
GTUP278	GALVANIZED[4]	$2^7/_8$	13.37	20.00	N/A	N/A	N/A	N/A
GTUP278-N	BARE[3]	$2^7/_8$	13.37	20.00	N/A	N/A	N/A	N/A
GTUPHC278	GALVANIZED[4]	$2^7/_8$	21.92	32.88	25.05	37.57	26.99	40.48
GTUPHC278-N	BARE[3]	$2^7/_8$	21.92	32.88	25.05	37.57	26.99	40.48
GTUP312	GALVANIZED[4]	$3^1/_2$	16.49	24.74	N/A	N/A	N/A	N/A
GTUP312-N	BARE[3]	$3^1/_2$	16.49	24.74	N/A	N/A	N/A	N/A
GTUPHC312	GALVANIZED[4]	$3^1/_2$	27.34	41.00	30.06	45.10	32.91	49.36
GTUPHC312-N	BARE[3]	$3^1/_2$	27.34	41.00	30.06	45.10	32.91	49.36

For **SI:** 1 inch = 25.4 mm, 1 kip (1000 lbf) = 4.48 kN. N/A= not applicable

[1]Load capacity is based on full scale load tests per AC358 with an installed 5'-0" unbraced pile length having a maximum of one coupling per IBC Section 1810.2.1. Underpinning brackets must be concentrically loaded and the bracket plate must be fully engaged with bottom of concrete foundation. Only localized limit states such as mechanical strength of steel components and concrete bearing have been evaluated.

[2]The tabulated capacities assume the pile foundation system is sidesway braced per IBC Section 1810.2.2.

[3]Capacities are based on bare steel losing 0.036-inch (318 µm) steel thickness as indicated in Section 3.9 of AC358 for a 50-year service life.

[4]Capacities are based on galvanized steel losing 0.013-inch (330 µm) steel thickness as indicated in Section 3.9 of AC358 for a 50-year service life.

[5]When load capacity is based on testing, a safety factor of 2.0 has been applied to the ultimate load for ASD capacity or a resistance factor 0.75 is applied to the ultimate load for LRFD capacity.

[6] When applicable, the tension and lateral load capacity of underpinning brackets must be designed by registered design professional in accordance with IBC Chapter 18.

TABLE 1B—TYPE B DIRECT LOAD BRACKET PART NO. AND DIMENSIONS

Product Number	Steel Type	Shaft Diameter (inches)	Plate Dimensions LxWxT (inches)	Sleeve Dimensions (inches)			No. of Predrilled 9/16-inch holes on Sleeve Used for Through-bolting to Shaft
				Outside Diameter	Thickness	Length	
NEW CONSTRUCTION BRACKETS SECTION 3.2.4.2 OF THIS REPORT							
GTBRST238-5X5-LS[1]	Galvanized	$2^3/_8$	5x5x1/4	2.875	0.188	5	2
GTBRST238-5X5-LS-N[1]	Bare	$2^3/_8$	5x5x1/4	2.875	0.188	5	2
GTBRST278-5X5[1]	Galvanized	$2^7/_8$	5x5x1/4	3.5	0.25	5	2
GTBRST278-5X5-N[1]	Bare	$2^7/_8$	5x5x1/4	3.5	0.25	5	2
GTBRST278-8X8[2]	Galvanized	$2^7/_8$	8x8x3/8	3.5	0.25	5	2
GTBRST278-8X8-N[2]	Bare	$2^7/_8$	8x8x3/8	3.5	0.25	5	2
GTBRST312-6.5X6.5[1]	Galvanized	3½	6.5x6.5x$^3/_8$	4	0.188	6.375	3
GTBRST312-6.5X6.5-N[1]	Bare	3½	6.5x6.5x$^3/_8$	4	0.188	6.375	3
GTBRST312-8X8[2]	Galvanized	3½	8x8x½	4	0.188	6.375	3
GTBRST312-8X8-N[2]	Bare	3½	8x8x½	4	0.188	6.375	3
FLAT PLATE WELDED TO SLEEVE SECTION 3.2.4.3 OF THIS REPORT							
GTBRST238-5X5-SS[1]	Galvanized	$2^3/_8$	5X5X1/4	2.875	0.188	2	2[8]
GTBRST238-5X5-SS-N[1]	Bare	$2^3/_8$	5X5X1/4	2.875	0.188	2	2[8]
GTBRST238-5X5-LS[1]	Galvanized	$2^3/_8$	5X5X1/4	2.875	0.188	5	2
GTBRST238-5X5-LS-N[1]	Bare	$2^3/_8$	5X5X1/4	2.875	0.188	5	2
GTBRST278-5X5[1]	Galvanized	$2^7/_8$	5X5X1/4	3.5	0.25	5	2
GTBRST278-5X5-N[1]	Bare	$2^7/_8$	5X5X1/4	3.5	2.5	5	2
GTBRST278-8X8[2]	Galvanized	$2^7/_8$	8X8X3/8	3.5	0.25	5	2
GTBRST278-8X8-N[2]	Bare	$2^7/_8$	8X8X3/8	3.5	2.5	5	2
GTBRST312-6.5X6.5[1]	Galvanized	3½	6.5X6.5X3/8	4.0	0.188	6.375	3
GTBRST312-6.5X6.5-N[1]	Bare	3½	6.5X6.5X3/8	4.0	0.188	6.375	3
GTBRST312-8X8[2]	Galvanized	3½	8X8X1/2	4.0	0.188	6.375	3
GTBRST312-8X8-N[2]	Bare	3½	8X8X1/2	4.0	0.188	6.375	3
U-SHAPE BRACKET WELDED TO SLEEVE SECTION 3.2.4.4 OF THIS REPORT							
GTBRST238U458[3]	Galvanized	$2^3/_8$	3.75x4.625X3.75X1/4	2.875	0.188	2	2[8]
GTBRST238U458-N[3]	Bare	$2^3/_8$	3.75x4.625X3.75X1/4	2.875	0.188	2	2[8]
GTBRST238U558[3]	Galvanized	$2^3/_8$	5.5x5.625X5.5X1/4	2.875	0.188	2	2[8]
GTBRST238U558-N[3]	Bare	$2^3/_8$	5.5x5.625X5.5X1/4	2.875	0.188	2	2[8]
GTBRST278U558[3]	Galvanized	$2^7/_8$	5.5x5.625X5.5X1/4	3.5	0.25	5	2
GTBRST278U558-N[3]	Bare	$2^7/_8$	5.5x5.625X5.5X1/4	3.5	0.25	5	2
GTBRST278U758[3]	Galvanized	$2^7/_8$	7.5x7.625X7.5X1/4	3.5	0.25	5	2
GTBRST278U758-N[3]	Bare	$2^7/_8$	7.5x7.625X7.5X1/4	3.5	0.25	5	2
GTBRST312U558[3]	Galvanized	3½	5.5x5.625X5.5X1/4	4.0	0.188	6.375	3
GTBRST312U558-N[3]	Bare	3½	5.5x5.625X5.5X1/4	4.0	0.188	6.375	3
GTBRST312U758[3]	Galvanized	3½	7.5x7.625X7.5X1/4	4.0	0.188	6.375	3
GTBRST312U758-N[3]	Bare	3½	7.5x7.625X7.5X1/4	4.0	0.188	6.375	3
FLAT BRACKET WELDED TO 1-INCH-DIAMETER STEEL THREADED ROD SECTION 3.2.4.5							
GTBASE238-5X5-C[4]	Galvanized	$2^3/_8$	5X5X1/4	2.875	0.188	2	2[8]
GTBASE238-5X5-E[4]	Galvanized	$2^3/_8$	5X5X1/4	2.875	0.188	2	
GTBASE238-5X5-C-N[4]	Bare	$2^3/_8$	8X8X3/8	2.875	0.188	2	
GTBASE238N-5X5-E-N[4]	Bare	$2^3/_8$	8X8X3/8	2.875	0.188	2	
GTBASE238-8X8-C[5]	Galvanized	$2^3/_8$	8X8X3/8	2.875	0.188	2	
GTBASE238-8X8-C-N[5]	Bare	$2^3/_8$	8X8X3/8	2.875	0.188	2	
U-SHAPE BRACKET WELDED TO 1-INCH-DIAMETER STEEL THREADED ROD SECTION 3.2.4.6							
GTBU558[3]	Galvanized	$2^3/_8$	5.5x5.625X5.5X1/4	2.875	0.188	2	2[8]
GTBU558-N[3]	Bare	$2^3/_8$	5.5x5.625X5.5X1/4	2.875	0.188	2	
GTBU458[3]	Galvanized	$2^3/_8$	3.75x4.625X3.75X1/4	2.875	0.188	2	
GTBU458-N[3]	Bare	$2^3/_8$	3.75x4.625X3.75X1/4	2.875	0.188	2	
GTBU358[3]	Galvanized	$2^3/_8$	3.5x3.625X3.5X1/4	2.875	0.188	2	
GTBU358-N[3]	Bare	$2^3/_8$	3.5x3.625X3.5X1/4	2.875	0.188	2	
GTBU558-3-C[3]	Galvanized	$2^3/_8$	5.5x5.625X5.3X1/4	2.875	0.188	2	
GTBU558-3-C-N[3]	Bare	$2^3/_8$	5.5x5.625X5.3X1/4	2.875	0.188	2	
GTBU558-3-E[3]	Galvanized	$2^3/_8$	5.5x5.625X5.3X1/4	2.875	0.188	2	
GTBU558-3-E-N[3]	Bare	$2^3/_8$	5.5x5.625X5.3X1/4	2.875	0.188	2	

For **SI:** 1 inch= 25.4 mm. n/a-not applicable.

[1]Plates come with eight (4) $^9/_{16}$-inch diameter predrilled holes located around the plate.

[2]Plates come with eight (8) $^9/_{16}$-inch diameter predrilled holes located around the plate.

[3]U-shape plates come with two (2) $^5/_8$-inch-diameter and two (2) $^9/_{32}$-inch-diameter predrilled holes located at the flange.

[4]Plates come with four (4) $^9/_{32}$-inch diameter predrilled holes located at each corner of the plate.

[5]Plates come with four (8) $^7/_{16}$-inch diameter predrilled holes located at each corner of the plate.

[6]Plates come with two clamps secured to supported beam flange using two (2) ¾-inch hex bolts.

[7]Plates come with two clamps secured to supported beam flange using two (4) ¾-inch hex bolts.

[8]Connection of bracket to helical pile shaft must comply using two (2)- ½-inch diameter hex-head bolts in accordance with Sections 4.4.3, 4.4.4, 4.4.5 and 4.4.6 of this report, as applicable.

TABLE 1C—COMPRESSION CAPACITY (P1) FOR NEW CONSTRUCTIONG BRACKETS [1]

MINIMUM CONCRETE COMPRESSIVE STRENGTH 3000 PSI						
PRODUCT NUMBER[2]	MECHANICAL ASD DESIGN COMPRESSION CAPACITY[3]			MINIMUM CONCRETE COVER ASD DESIGN COMPRESSION CAPACITY[3]		
	ASD (kips)	New Construction Bracket Installation Requirements[4]		ASD (kips)	New Construction Bracket Installation Requirements[4]	
		Min. Bracket Embedment (inches)	Min. Concrete Footing Width (inches)		Min. Bracket Embedment (inches)	Min. Concrete Footing Width (inches)
GTBRST238-5X5-LS[5]	33.40	10	24	8.80	4	13
GTBRST238-5X5-LS-N[6]	26.30	9	22	8.78	4	13
GTBRST278-5X5[5]	45.20	12	28	8.80	4	13
GTBRST278-5X5-N[6]	38.33	11	26	8.78	4	13
GTBRST278-8X8[5]	61.18	13	33	11.74	4	16
GTBRST278-8X8-N[6]	54.02	12	31	11.71	4	16
GTBRST312-6.5X6.5[5]	70.60	15	35	10.27	4	14.5
GTBRST312-6.5X6.5-N[6]	58.40	13	32	10.24	4	14.5
GTBRST312-8X8[5]	70.60	14	35	11.74	4	16
GTBRST312-8X8-N[6]	58.40	12	32	11.71	4	16
MINIMUM CONCRETE COMPRESSIVE STRENGTH 4000 PSI						
PRODUCT NUMBER[2]	MECHANICAL ASD DESIGN COMPRESSION CAPACITY[3]			MINIMUM CONCRETE COVER ASD DESIGN COMPRESSION CAPACITY[3]		
	ASD (kips)	New Construction Bracket Installation Requirements[4]		ASD (kips)	New Construction Bracket Installation Requirements[4]	
		Min. Bracket Embedment (inches)	Min. Concrete Footing Width (inches)		Min. Bracket Embedment (inches)	Min. Concrete Footing Width (inches)
GTBRST238-5X5-LS[5]	33.40	9	23	10.17	4	13
GTBRST238-5X5-LS-N[6]	26.30	8	20	10.13	4	13
GTBRST278-5X5[5]	45.20	11	26	10.17	4	13
GTBRST278-5X5-N[6]	38.33	10	24	10.13	4	13
GTBRST278-8X8[5]	61.18	12	31	13.56	4	16
GTBRST278-8X8-N[6]	54.02	11	29	13.53	4	16
GTBRST312-6.5X6.5[5]	70.60	14	33	11.86	4	14.5
GTBRST312-6.5X6.5-N[6]	58.40	12	30	11.83	4	14.5
GTBRST312-8X8[5]	70.60	13	33	13.56	4	16
GTBRST312-8X8-N[6]	58.40	11	30	13.53	4	16

For **SI:** 1 inch = 25.4 mm, 1 kip (1000 lbf) = 4.48 kN. N/A= not applicable.

[1]The tabulated capacities assume the pile foundation system is sidesway braced per IBC Section 1810.2.2.
[2]See Table 1B for bracket description.
[3]The ASD compressive load capacity is based on the mechanical strength of the steel bracket, concrete punching shear capacity, and concrete bearing strength. The allowable load capacities have been determined assuming unreinforced concrete in accordance with ACI 318.
[4]The bracket embedment depth is the distance between the top of the bracket plate to the top of the concrete footing. End of helical pile shaft must be fully bearing on bracket plate. The concrete footing must be normal-weight concrete having a minimum compressive strength of 3,000 psi. The lesser capacity of alternate bracket installation conditions must be determined by a registered design professional.
[5]Capacities for galvanized steel brackets are based on galvanized steel losing 0.013-inch (330 µm) steel thickness as indicated in Section 3.9 of AC358 for a 50-year service life.
[6]Capacities for bare steel brackets are based on bare steel losing 0.036-inch (318 µm) steel thickness as indicated in Section 3.9 of AC358 for a 50-year service life.

TABLE 1D—TENSION CAPACITY (P1) FOR NEW CONSTRUCTIONG BRACKETS [1]

MINIMUM CONCRETE COMPRESSIVE STRENGTH 3000 PSI										
PRODUCT NUMBER[2]	MECHANICAL ASD DESIGN TENSION CAPACITY[3]					MINIMUM CONCRETE COVER ASD TENSION CAPACITY				
	ASD (kips)		New Construction Bracket Installation Requirements[4]			ASD (kips)		New Construction Bracket Installation Requirements[4]		
	SDC A and B	SDC C-F	Min. Bracket Embedment (inches)	Min. Concrete Footing Width (inches)	No. of ½-inch Through Bolts Required[4]	SDC A and B	SDC C-F	Min. Bracket Embedment (inches)	Min. Concrete Footing Width (inches)	No. of ½-inch Through Bolts Required[4]
GTBRST238-5X5-LS[6]	14.53	10.89	8	21	2	1.47	1.10	3	13	2
GTBRST238-5X5-LS-N[7]	11.18	8.39	7	19	2	1.46	1.09	3	13	2
GTBRST278-5X5[6]	21.88	16.41	10	24	2	1.47	1.10	3	13	2
GTBRST278-5X5-N[7]	16.86	12.65	9	22	2	1.46	1.09	3	13	2
GTBRST278-8X8[6]	23.00	17.25	9	25	2	2.20	1.65	3	16	2
GTBRST278-8X8-N[7]	19.42	14.57	8	24	2	2.19	1.65	3	16	2
GTBRST312-6.5X6.5[6]	28.70	21.53	11	27	3	1.83	1.38	3	14.5	3
GTBRST312-6.5X6.5-N[7]	22.72	17.04	9	25	3	1.83	1.37	3	14.5	3
GTBRST312-8X8[6]	28.70	21.53	10	28	3	2.20	1.65	3	16	3
GTBRST312-8X8-N[7]	22.72	17.04	9	25	3	2.19	1.65	3	16	3
MINIMUM CONCRETE COMPRESSIVE STRENGTH 4000 PSI										
PRODUCT NUMBER[2]	MECHANICAL ASD DESIGN TENSION CAPACITY[3]					MINIMUM CONCRETE COVER ASD TENSION CAPACITY				
	ASD (kips)		New Construction Bracket Installation Requirements[4]			ASD (kips)		New Construction Bracket Installation Requirements[4]		
	SDC A and B	SDC C-F	Min. Bracket Embedment (inches)	Min. Concrete Footing Width (inches)	No. of ½-inch Through Bolts Required[4]	SDC A and B	SDC C-F	Min. Bracket Embedment (inches)	Min. Concrete Footing Width (inches)	No. of ½-inch Through Bolts Required[4]
GTBRST238-5X5-LS[6]	14.53	10.89	8	20	2	1.69	1.27	3	13	2
GTBRST238-5X5-LS-N[7]	11.18	8.39	7	18	2	1.69	1.26	3	13	2
GTBRST278-5X5[6]	21.88	16.41	9	23	2	1.69	1.27	3	13	2
GTBRST278-5X5-N[7]	16.86	12.65	8	21	2	1.69	1.26	3	13	2
GTBRST278-8X8[6]	23.00	17.25	8	24	2	2.54	1.91	3	16	2
GTBRST278-8X8-N[7]	19.42	14.57	8	23	2	2.53	1.9	3	16	2
GTBRST312-6.5X6.5[6]	28.70	21.53	10	26	3	2.12	1.59	3	14.5	3
GTBRST312-6.5X6.5-N[7]	22.72	17.04	9	24	3	2.11	1.58	3	14.5	3
GTBRST312-8X8[6]	28.70	21.53	9	26	3	2.54	1.91	3	16	3
GTBRST312-8X8-N[7]	22.72	17.04	8	24	3	2.53	1.90	3	16	3

For **SI:** 1 inch = 25.4 mm, 1 kip (1000 lbf) = 4.48 kN. N/A= not applicable.

[1]The tabulated capacities assume the pile foundation system is sidesway braced per IBC Section 1810.2.2.
[2]See Table 1B for bracket description.
[3]The ASD capacity is based on the mechanical strength of the steel bracket, punching shear capacity and bearing to concrete footing. The allowable load capacities have been determined assuming unreinforced concrete in accordance with ACI 318.
[4]The capacity is based using ½ -inch through bolts as described in Section 3.2.4.2 of this report. The bolt threads are excluded from the shear plane.
[5]The embedment depth is the distance between the bottom of the bracket plate to the bottom of the concrete footing. The concrete footing must be normal-weight concrete having a minimum compressive strength of 3,000 psi. The lesser capacity of alternate bracket installation conditions must be determined by a registered design professional.
[6]Capacities for galvanized steel brackets are based on galvanized steel losing 0.013-inch (330 µm) steel thickness as indicated in Section 3.9 of AC358 for a 50-year service life.
[7]Capacities for bare steel brackets are based on bare steel losing 0.036-inch (318 µm) steel thickness as indicated in Section 3.9 of AC358 for a 50-year service life.

TABLE 1E—ALLOWABLE (ASD) LATERAL CAPACITY (P1) FOR NEW CONSTRUCTIONG BRACKETS [1,2]

MINIMUM CONCRETE COMPRESSIVE STRENGTH 3000 PSI								
PRODUCT NUMBER[3]	MECHANICAL ASD DESIGN LATERAL CAPACITY[3]				MINIMUM CONCRETE COVER ASD LATERAL CAPACITY			
	ASD (kips)		New Construction Bracket Installation Requirements[4]		ASD (kips)		New Construction Bracket Installation Requirements[4]	
	SDC A-B	SDC C-F	Min. Bracket Embedment (inches)	Min. Concrete Footing Width (inches)	SDC A-B	SDC C-F	Min. Bracket Embedment (inches)	Min. Concrete Footing Width (inches)
GTBRST238-5X5-LS[4]	6.07	4.34	8	21	1.4	1.0	3	13
GTBRST238-5X5-LS-N[5]	4.95	3.53	7	19	1.41	1.01	3	13
GTBRST278-5X5[4]	7.95	5.68	10	24	1.35	0.96	3	13
GTBRST278-5X5-N[5]	6.74	4.81	9	22	1.35	0.96	3	13
GTBRST278-8X8[4]	7.79	5.57	9	25	1.75	1.25	3	16
GTBRST278-8X8-N[5]	6.89	4.92	8	24	1.75	1.25	3	16
GTBRST312-6.5X6.5[4]	9.39	6.70	11	27	1.46	1.05	3	14.5
GTBRST312-6.5X6.5-N[5]	7.57	5.41	9	25	1.46	1.05	3	14.5
GTBRST312-8X8[4]	9.23	6.59	10	28	1.66	1.19	3	16
GTBRST312-8X8-N[5]	7.57	5.41	9	25	1.66	1.19	3	16
MINIMUM CONCRETE COMPRESSIVE STRENGTH 4000 PSI								
PRODUCT NUMBER[3]	MECHANICAL ASD DESIGN LATERAL CAPACITY[3]				MINIMUM CONCRETE COVER ASD LATERAL CAPACITY			
	ASD (kips		New Construction Bracket Installation Requirements[4]		ASD (kips)		New Construction Bracket Installation Requirements[4]	
	SDC A-B	SDC C-F	Min. Bracket Embedment (inches)	Min. Concrete Footing Width (inches)	SDC A-B	SDC C-F	Min. Bracket Embedment (inches)	Min. Concrete Footing Width (inches)
GTBRST238-5X5-LS[4]	6.64	4.74	8	20	1.63	1.17	3	13
GTBRST238-5X5-LS-N[5]	5.37	3.84	7	18	1.63	1.17	3	13
GTBRST278-5X5[4]	8.18	5.85	9	23	1.56	1.11	3	13
GTBRST278-5X5-N[5]	6.82	4.87	8	21	1.56	1.11	3	13
GTBRST278-8X8[4]	7.95	5.68	8	24	2.02	1.44	3	16
GTBRST278-8X8-N[5]	7.58	5.41	8	23	2.02	1.44	3	16
GTBRST312-6.5X6.5[4]	9.78	6.99	10	26	1.69	1.21	3	14.5
GTBRST312-6.5X6.5-N[5]	8.34	5.96	9	24	1.69	1.21	3	14.5
GTBRST312-8X8[4]	9.15	6.54	9	26	1.92	1.37	3	16
GTBRST312-8X8-N[5]	7.72	5.51	8	24	1.92	1.37	3	16

For **SI:** 1 inch = 25.4 mm, 1 kip (1000 lbf) = 4.48 kN. N/A= not applicable.

[1]The ASD and LRFD lateral capacities are based on limit states associated with mechanical steel strength, concrete breakout in accordance with ACI 318, and bracket bearing on unreinforced concrete in accordance with ACI 318. The bracket must be installed with a minimum embedment depth of 3 inches measured from the bottom of the bracket plate to the bottom of the concrete footing, and a minimum edge distance of 4 inches measured from the bracket plate edge to the concrete footing edge. The concrete must be normal-weight concrete having a minimum compressive strength of 3,000 psi.

[2]The tabulated capacities assume the pile foundation system is sidesway braced per IBC Section 1810.2.2.

[3]See Table 1B for bracket description.

[4]Capacities for galvanized steel brackets are based on galvanized steel losing 0.013-inch (330 µm) steel thickness as indicated in Section 3.9 of AC358 for a 50-year service life.

[5]Capacities for bare steel brackets are based on bare steel losing 0.036-inch (318 µm) steel thickness as indicated in Section 3.9 of AC358 for a 50-year service life.

TABLE 1F- ALLOWABLE (ASD) LOAD CAPACITY (P1) OF FLAT PLATE WELDED TO SLEEVE

PRODUCT NUMBER	MECHANICAL ASD LOAD CAPACITY SEISMIC DESIGN CATEGORIES A, B AND C			MECHANICAL ASD LOAD CAPACITY SEISMIC DESIGN CATEGORIES D, E AND F		
	Compression (kips)	Tension (kips)	Lateral (kips)	Compression (kips)	Tension (kips)	Lateral (kips)
GTBRST238HC-5X5-SS[4,7]	33.4	7.79	10.47	33.4	6.52	10.47
GTBRST238HC-5X5-SS-N[4,8]	26.3	5.68	8.49	26.3	4.73	8.49
GTBRST238LSLEEVE-5X5-5X5LS[5,7]	33.4	15.57	12.69	33.4	15.57	12.69
GTBRST238LSLEEVE-5X5-5X5LS-N[5,8]	26.3	11.74	10.41	26.3	11.74	10.41
GTBRST278LSLEEVE-5X5[5,7]	52.4	25.48	21.31	43.7	25.48	20.79
GTBRST278LSLEEVE-5X5-N[5,8]	40.3	21.50	18.45	33.6	21.50	18.12
GTBRST278LSLEEVE-8X8[5,7]	65.5	25.48	21.31	65.5	25.48	20.79
GTBRST278LSLEEVE-8X8-N[5,8]	57.1	21.50	18.45	57.1	21.50	18.12
GTBRST312LSLEEVE-6.5X6.5[6,7]	70.6	28.78	18.95	60.5	28.78	18.12
GTBRST312LSLEEVE-6.5X6.5-N[6,8]	58.4	22.79	15.59	50.1	22.79	14.99
GTBRST312LSLEEVE-8x8[6,7]	70.6	28.78	18.95	60.5	28.78	18.12
GTBRST312LSLEEVE-8x8-N[6,8]	58.4	22.80	15.59	50.1	22.80	14.99

For **SI:** 1 inch = 25.4 mm, 1 kip (1000 lbf) = 4.48 kN. N/A= not applicable.

[1]The ASD capacities are based on limit states associated with mechanical steel strength of the bracket to the helical pile shaft. The member supported by the bracket must be designed by the registered design professional and must not exceed the tabulated capacities. The supported member must be connected to bracket plate with a minimum of four bolts and must have a minimum thickness of at least 1.5 times the plate thickness.
[2]The tabulated capacities assume the pile foundation system is sidesway braced per IBC Section 1810.2.2.
[3]See Table 1B for bracket description.
[4]Tabulated capacities based on two (2)- ½-inch-diameter hex head bolts installed in accordance with Section 4.4.3.
[5]Tabulated capacities based on two (2)- ½-inch-diameter hex head through-bolts with matching nuts complying with Section 3.3.6 of this report.
[6]Tabulated capacities based on three (3)- ½-inch-diameter hex head through-bolts with matching nuts complying with Section 3.3.6 of this report.
[7]Capacities for galvanized steel brackets are based on galvanized steel losing 0.013-inch (330 µm) steel thickness as indicated in Section 3.9 of AC358 for a 50-year service life.
[8]Capacities for bare steel brackets are based on bare steel losing 0.036-inch (318 µm) steel thickness as indicated in Section 3.9 of AC358 for a 50-year service life.

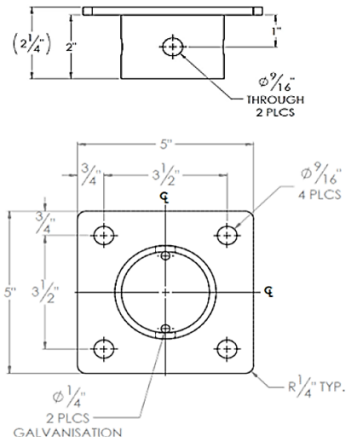

GTBRST238-5x5-SS
GTBRST238-5x5-SS-N

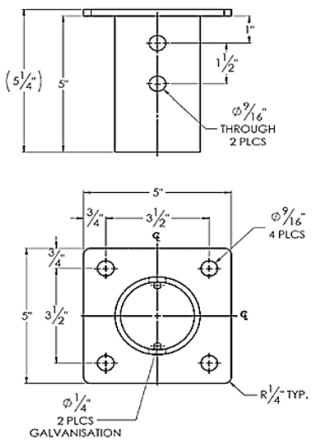

GTBRST238-5x5-LS
GTBRST238-5x5-LS-N

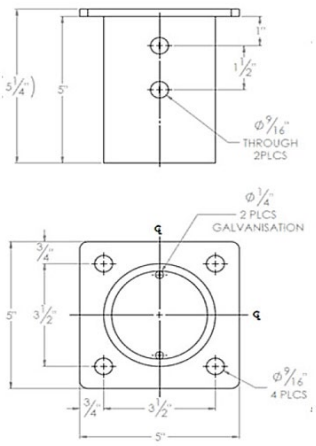

GTBRST278-5X5
GTBRST278-5X5-N

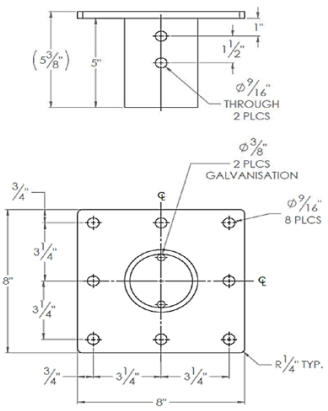

GTBRST278-8X8
GTBRST278-8X8-N

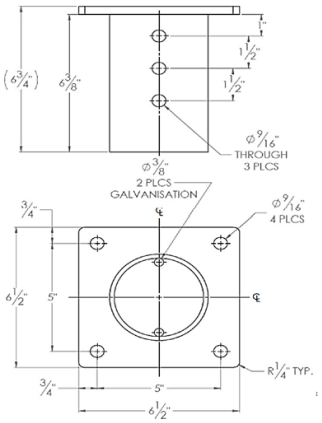

GTBRST312-6.5X6.5
GTBRST312-6.5X6.5-N

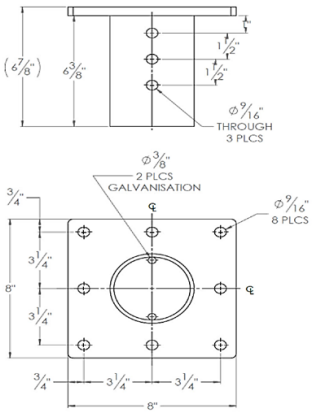

GTBRST312-8x8
GTBRST312-8x8-N

Figure 1F

TABLE 1G- ALLOWABLE (ASD) LOAD CAPACITY (P1) OF U-SHAPE PLATE WELDED TO SLEEVE

PRODUCT NUMBER	MECHANICAL ASD LOAD CAPACITY SEISMIC DESIGN CATEGORIES A, B AND C			MECHANICAL ASD LOAD CAPACITY SEISMIC DESIGN CATEGORIES D, E AND F		
	Compression (kips)	Tension (kips)	Lateral (kips)	Compression (kips)	Tension (kips)	Lateral (kips)
GTBREST238U458[4,7]	33.4	7.79	10.47	33.4	6.52	10.47
GTBREST238U458-N[4,8]	26.3	5.68	8.49	26.3	4.73	8.49
GTBREST238U558[4,7]	33.4	7.79	10.47	33.4	6.52	10.47
GTBREST238U558-N[4,8]	26.3	5.68	8.49	26.3	4.73	8.49
GTBREST278U558[5,7]	65.5	24.91	18.32	55.0	20.75	18.32
GTBREST278U558-N[5,8]	50.9	21.04	15.72	42.4	17.53	15.72
GTBREST278U758[5,7]	65.5	24.01	18.32	65.5	20.75	18.32
GTBREST278U758-N[5,8]	57.1	18.33	15.72	57.1	15.27	15.72
GTBREST312U558[6,7]	70.6	24.91	16.72	59.7	20.75	16.72
GTBREST312U558-N[6,8]	55.3	21.04	13.66	46.1	17.53	13.66
GTBREST312U758[6,7]	70.6	24.91	16.72	60.5	20.75	16.72
GTBREST312U758-N[6,8]	58.4	21.04	13.66	50.1	17.53	13.66

For **SI:** 1 inch = 25.4 mm, 1 kip (1000 lbf) = 4.48 kN. N/A= not applicable.

[1]The ASD capacities are based on limit states associated with mechanical steel strength of the bracket to the helical pile shaft. The member supported by the bracket must be designed by the registered design professional and must not exceed the tabulated capacities.
[2]The tabulated capacities assume the pile foundation system is sidesway braced per IBC Section 1810.2.2.
[3]See Table 1B for bracket description.
[4]Tabulated capacities based on two (2)- ½-inch-diameter hex head bolts connected in accordance with Section 4.4.4.
[5]Tabulated capacities based on two (2)- ½-inch-diameter hex head through-bolts with matching nuts complying with Section 3.3.6 of this report.
[6]Tabulated capacities based on three (3)- ½-inch-diameter hex head through-bolts with matching nuts complying with Section 3.3.6 of this report.
[7]Capacities for galvanized steel brackets are based on galvanized steel losing 0.013-inch (330 µm) steel thickness as indicated in Section 3.9 of AC358 for a 50-year service life.
[8]Capacities for bare steel brackets are based on bare steel losing 0.036-inch (318 µm) steel thickness as indicated in Section 3.9 of AC358 for a 50-year service life.

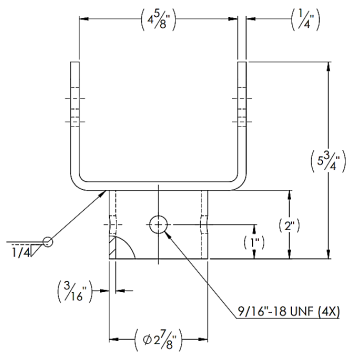

GTBRST238U458
GTBRST238U458-N

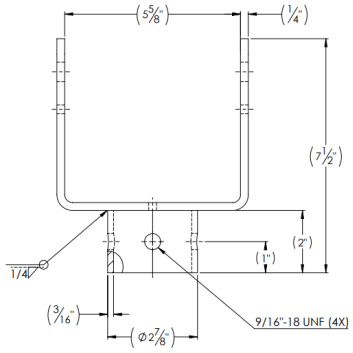

GTBRST238U558
GTBRST238U558-N

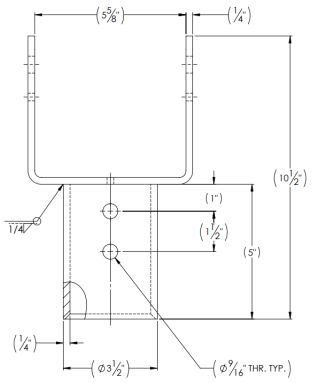

GTBRST278U558
GTBRST278U558-N

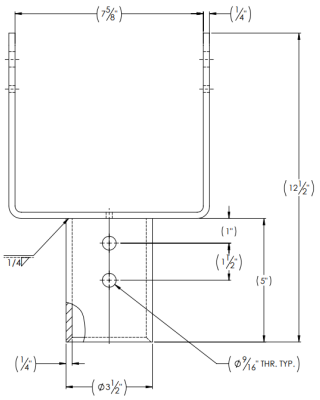

GTBRST278U758
GTBRST278U758-N

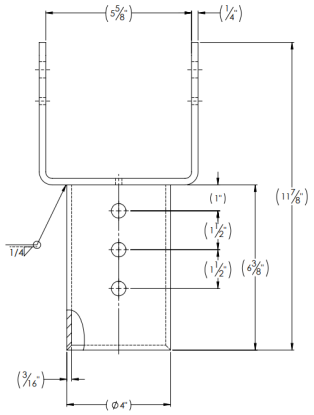

GTBRST312U558
GTBRST312U558-N

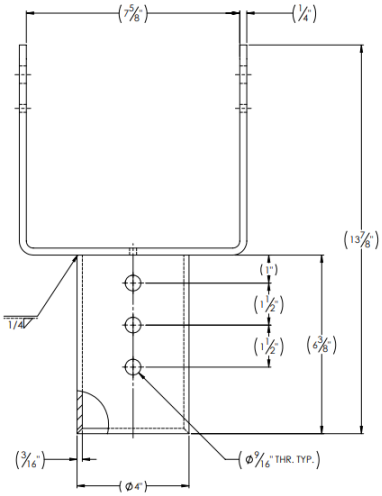

GTBRST312U758
GTBRST312U758-N

Figure 1G

TABLE 1H- ALLOWABLE (ASD) LOAD CAPACITY (P1) OF FLAT STEEL PLATE WELDED TO ADJUSTABLE THREADED STEEL ROD

PRODUCT NUMBER[3]	MECHANICAL ASD LOAD CAPACITY[1,2,5]										
	Compression (kips)									Tension (kips)	Lateral (kips)
	Threaded Rod Length[4], inches										
	0	0.5	1	2	3	4	5	6	Max		
GTBASE238-5X5-C[7]	33.40	30.98	29.70	27.36	25.28	23.41	21.72	20.20	19.48	6.38	9.65
GTBASE238-5X5-E[7]	33.40	3.31	3.28	3.23	3.18	3.13	3.08	3.03	3.00	6.38	9.65
GTBASE238-5X5-C-N[8]	26.3	26.3	26.3	26.3	24.71	22.75	21.01	19.45	18.68	5.78	7.59
GTBASE238N-5X5-E-N[8]	26.3	2.81	2.79	2.74	2.70	2.66	2.61	2.57	2.55	5.78	7.59
GTBASE238-8X8-C[7]	33.40	30.98	29.70	27.36	25.28	23.41	21.72	20.20	18.97	6.38	9.65
GTBASE238-8X8N-C-N[8]	26.30	26.30	26.30	26.30	24.71	22.75	21.01	19.45	18.17	5.78	7.59

For **SI:** 1 inch = 25.4 mm, 1 kip (1000 lbf) = 4.48 kN. N/A= not applicable.

[1]The ASD capacities are based on limit states associated with mechanical steel strength of the bracket to the helical pile shaft. The member supported by the bracket must be designed by the registered design professional and must not exceed the tabulated capacities. The tabulated capacities are based on the supported member connected to the top plate using ASTM A325 bolts on each predrilled holes of the plate.
[2]The tabulated capacities assume the pile foundation system is sidesway braced per IBC Section 1810.2.2.
[3]See Table 1B and Figure 1H for bracket description.
[4]Threaded rod length is the distance above the top of the adjustable connection head. Maximum threaded rod length is 6.507 inches for GTBASE238; 6.536 inches for GTBASE238-N; 6.882 inches for GTBASE238-8x8; 6.911 inches for GTBASE238-8x8-N.
[5]Tabulated capacities based on two (2)- ½-inch-diameter hex head bolts installed in accordance with Section 4.4.5.
[7]Capacities for galvanized steel brackets are based on galvanized steel losing 0.013-inch (330 µm) steel thickness as indicated in Section 3.9 of AC358 for a 50-year service life.
[8]Capacities for bare steel brackets are based on bare steel losing 0.036-inch (318 µm) steel thickness as indicated in Section 3.9 of AC358 for a 50-year service life.

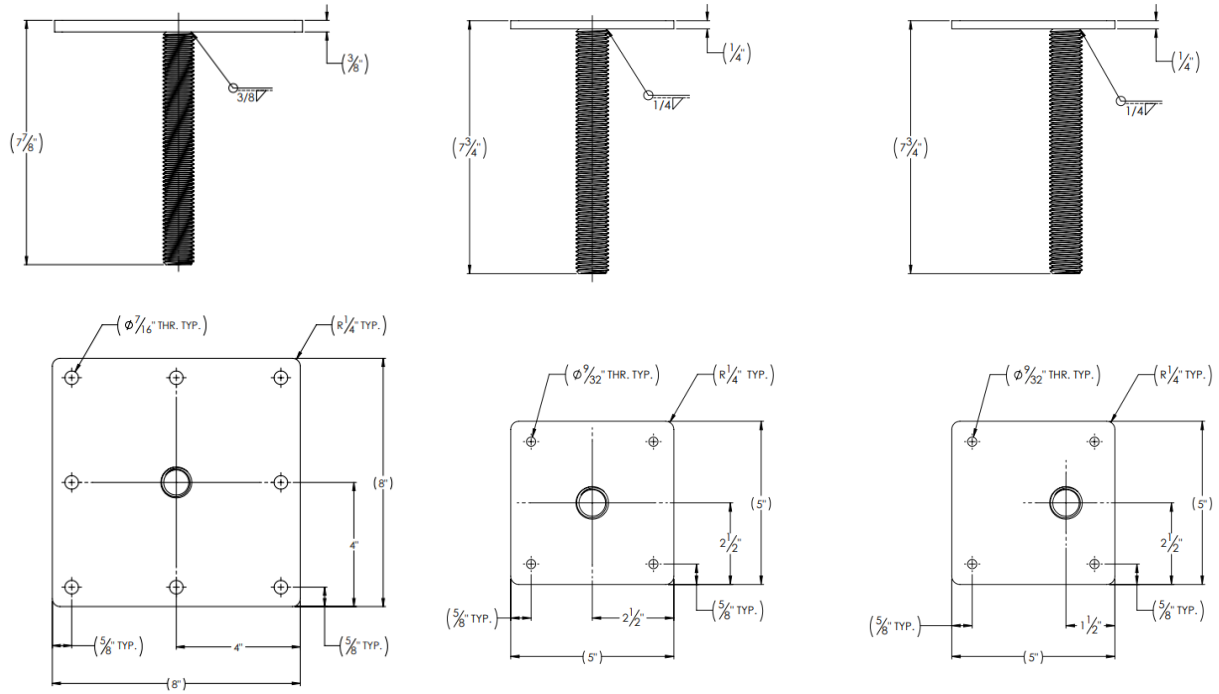

GTBASE238-8X8-C
GTBASE238-8X8-C-N

GTBASE238-5X5-C
GTBASE238-5X5-C-N

GTBASE238-5X5-E
GTBASE238-5X5-E-N

Figure 1H

TABLE 1I- ALLOWABLE (ASD) LOAD CAPACITY (P1) OF U-SHAPE STEEL PLATE WELDED TO ADJUSTABLE THREADED STEEL ROD

PRODUCT NUMBER[3]	MECHANICAL ASD LOAD CAPACITY[1,2,5]										
	Compression (kips)									Tension (kips)	Lateral (kips)
	Threaded Rod Length[4], inches										
	0	0.5	1	2	3	4	5	6	Max		
GTBU558[7]	33.40	30.98	29.70	27.36	25.28	23.41	21.72	20.20	19.48	6.38	9.65
GTBU558-N[8]	26.30	26.30	26.30	26.30	24.71	22.75	21.01	19.45	18.68	5.78	7.59
GTBU458[7]	33.40	30.98	29.70	27.36	25.28	23.41	21.72	20.20	19.48	6.38	9.65
GTBU458-N[8]	26.30	26.30	26.30	26.30	24.71	22.75	21.01	19.45	18.68	5.78	7.59
GTBU358[7]	33.40	30.98	29.70	27.36	25.28	23.41	21.72	20.20	19.48	6.38	9.65
GTBU358-N[8]	26.30	26.30	26.30	26.30	24.71	22.75	21.01	19.45	18.68	5.78	7.59
GTBU558-3-C[7]	33.40	30.98	29.70	27.36	25.28	23.41	21.72	20.20	19.48	6.38	9.65
GTBU558-3-C-N[8]	26.30	26.30	26.30	26.30	24.71	22.75	21.01	19.45	18.68	5.63	7.59
GTBU558-3-E[7]	33.40	3.31	3.28	3.23	3.18	3.13	3.08	3.03	3.00	6.38	9.65
GTBU558-3-E-N[8]	26.30	2.81	2.79	2.74	2.70	2.66	2.61	2.57	2.55	5.63	7.59

For **SI:** 1 inch = 25.4 mm, 1 kip (1000 lbf) = 4.48 kN. N/A= not applicable.

[1]The ASD capacities are based on limit states associated with mechanical steel strength of the bracket to the helical pile shaft. The member supported by the bracket must be designed by the registered design professional and must not exceed the tabulated capacities. The tabulated capacities are based on the assumptions that the supported member has a stiffness greater than bracket and is connected to the top plate using minimum of two (2) ASTM A325 through-bolts on each predrilled holes of the plate.

[2]The tabulated capacities assume the pile foundation system is sidesway braced per IBC Section 1810.2.2.

[3]See Table 1B and Figure 1I for bracket description.

[4]Threaded rod length is the distance above the top of the adjustable connection head. Maximum threaded rod length is 6.507 inches for GTBU358, GTBU458, GTBU558, GTBU558-3-C and GTBU558-3-E; 6.536 inches for GTBU358-N, GTBU458-N, GTBU558-N, GTBU558-3-C-N and GTBU558-3-E-N.

[5]Tabulated capacities based on two (2)- ½-inch-diameter hex head bolts installed in accordance with Section 4.4.6

[7]Capacities for galvanized steel brackets are based on galvanized steel losing 0.013-inch (330 µm) steel thickness as indicated in Section 3.9 of AC358 for a 50-year service life.

[8]Capacities for bare steel brackets are based on bare steel losing 0.036-inch (318 µm) steel thickness as indicated in Section 3.9 of AC358 for a 50-year service life.

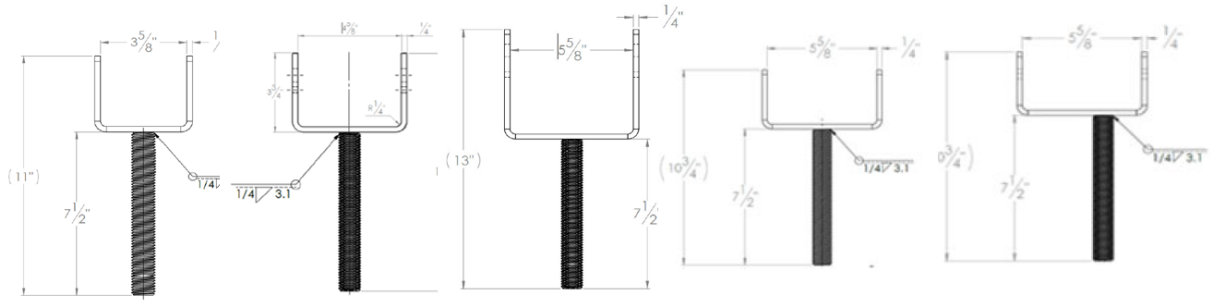

Figure 1I

TABLE 2A—MECHANICAL PROPERTIES AFTER CORROSION LOSS OF $2^3/_8$-INCH DIAMETER HELICAL SHAFT

Mechanical Properties	STEEL CONDITION	
	BARE STEEL[1]	GALVANIZED STEEL[2]
Steel Yield Strength, F_y (ksi)	60	60
Steel Ultimate Strength, F_u (ksi)	70	70
Modulus of Elasticity, E (ksi)	29,000	29,000
Nominal Wall Thickness (inch)	0.154	0.154
Design Wall Thickness (inch)	0.107	0.136
Outside Diameter (inch)	2.339	2.368
Inside Diameter (inch)	2.125	2.096
Cross Sectional Area (inch^2)	0.75	0.96
Moment of Inertia, I (inch^4)	0.47	0.60
Radius of Gyration, r (inch)	0.79	0.79
Section Modulus, S (inch^3)	0.40	0.50
Plastic Section Modulus, Z (inch^3)	0.50	0.65

For **SI**: 1 inch = 25.4 mm; 1 ksi = 6.89 MPa, 1 ft-lbf =1.36 N-m; 1 lbf =4.45 N.

[1]Dimensional properties are based on bare steel losing 0.036-inch steel thickness as indicated in Section 3.9 of AC358 for a 50-year service life.

[2]Dimensional properties are based on galvanized steel losing 0.013-inch steel thickness as indicated in Section 3.9 of AC358 for a 50-year service life.

TABLE 2B—MECHANICAL PROPERTIES AFTER CORROSION LOSS OF $2^7/_8$-INCH DIAMETER HELICAL SHAFT

Mechanical Properties	STEEL CONDITION	
	BARE STEEL[1]	GALVANIZED STEEL[2]
Steel Yield Strength, F_y (ksi)	60	60
Steel Ultimate Strength, F_u (ksi)	70	70
Modulus of Elasticity, E (ksi)	29,000	29,000
Nominal Wall Thickness (inch)	0.25	0.25
Design Wall Thickness (inch)	0.197	0.226
Outside Diameter (inch)	2.839	2.869
Inside Diameter (inch)	2.446	2.416
Cross Sectional Area (inch^2)	1.63	1.88
Moment of Inertia, I (inch^4)	1.43	1.65
Radius of Gyration, r (inch)	0.94	0.94
Section Modulus, S (inch^3)	1.01	1.15
Plastic Section Modulus, Z (inch^3)	1.37	1.58

For **SI**: 1 inch = 25.4 mm; 1 ksi = 6.89 MPa, 1 ft-lbf =1.36 N-m; 1 lbf =4.45 N.

[1]Dimensional properties are based on bare steel losing 0.036-inch steel thickness as indicated in Section 3.9 of AC358 for a 50-year service life.

[2]Dimensional properties are based on galvanized steel losing 0.013-inch steel thickness as indicated in Section 3.9 of AC358 for a 50-year service life.

TABLE 2C—MECHANICAL PROPERTIES AFTER CORROSION LOSS OF $3^1/_2$-INCH DIAMETER HELICAL SHAFT

Mechanical Properties	STEEL CONDITION	
	BARE STEEL[1]	GALVANIZED STEEL[2]
Steel Yield Strength, F_y (ksi)	60	60
Steel Ultimate Strength, F_u (ksi)	70	70
Modulus of Elasticity, E (ksi)	29,000	29,000
Nominal Wall Thickness (inch)	0.25	0.25
Design Wall Thickness (inch)	0.197	0.226
Outside Diameter (inch)	3.464	3.494
Inside Diameter (inch)	3.071	3.041
Cross Sectional Area (inch^2)	2.02	2.32
Moment of Inertia, I (inch^4)	2.70	3.12
Radius of Gyration, r (inch)	1.16	1.16
Section Modulus, S (inch^3)	1.56	1.78
Plastic Section Modulus, Z (inch^3)	2.10	2.42

For **SI**: 1 inch = 25.4 mm; 1 ksi = 6.89 MPa, 1 ft-lbf =1.36 N-m; 1 lbf =4.45 N.

[1]Dimensional properties are based on bare steel losing 0.036-inch steel thickness as indicated in Section 3.9 of AC358 for a 50-year service life.
[2]Dimensional properties are based on galvanized steel losing 0.013-inch steel thickness as indicated in Section 3.9 of AC358 for a 50-year service life.

TABLE 3A—ALLOWABLE (ASD) SHAFT CAPACITY (P2) FOR $2^3/_8$–INCH-DIAMETER PILE WITH COUPLER ECCENTRICITY[3,4] (kips)

STEEL TYPE	UNBRACED SHAFT LENGTH, L_u (FT) [1]	(P2) CAPACITY (KIPS) FOR $2^3/_8$-INCH DIAMETER SHAFTS[7]					
		COMPRESSION (KIPS)			TENSION (KIPS)	LATERAL SHEAR (KIPS)	BENDING MOMENT (KIPS-FT)
		0 Coupler	1 Coupler[2]	2 Couplers[2]			
BARE[5]	0	26.3	26.3	26.3	11.74	6.4	1.51
	5	9.7	5.2	3.1			
	10	4.3	3.1	2.2			
	15	2.2	1.9	1.5			
	20	1.4	1.2	1.1			
GALVANIZED[6]	0	33.4	33.4	33.4	15.57	8.2	1.93
	5	12.4	6.7	4.0			
	10	5.5	4.0	2.8			
	15	2.8	2.4	1.9			
	20	1.8	1.6	1.3			

For **SI**: 1 inch = 25.4 mm; 1 ft = 0.305 m; 1 kip (1000 lbf) = 4.48 kN.

[1]L_u=Total unbraced pile length per IBC Section 1810.2.1, including the length in air, water or in fluid soils, and the embedment length into firm or soft soil (non-fluid soil). k = Effective length factor. kLu = total effective unbraced length of the pile, where kLu = 0 represent a fully braced condition in that the total pile length is fully embedded in firm or soft soil and the supported structure is braced in accordance IBC Section 1810.2.2 . Helical pile systems used under the IRC as an alternate foundation system supporting structure types listed in 4.1.1 with shafts fully embedded into soil conditions defined in IRC Table R401.4.1 shall be deemed adequate to prevent buckling of the shaft.
[2]Number of couplings within L_u
[3]The capacities shown in Table 3A are for $2^3/_8$-inch-diameter pilings installed with a maximum 1 degree of inclination and the assumption that the pile shaft is concentrically loaded.
[4]Capacities based on two ½-inch bolts with matching nuts installed complying with Section 3.3.3. The bolt threads are excluded from the connection shear plane.
[5]Capacities are based on bare steel losing 0.036-inch (318 µm) steel thickness as indicated in Section 3.9 of AC358 for a 50-year service life.
[6]Capacities are based on galvanized steel losing 0.013-inch (330 µm) steel thickness as indicated in Section 3.9 of AC358 for a 50-year service life.
[7]ASD capacities are based on AISC 360.

TABLE 3B—ALLOWABLE (ASD) SHAFT CAPACITY (P2) FOR $2^7/_8$–INCH-DIAMETER PILE WITH COUPLER ECCENTRICITY[3,4] (kips)

STEEL TYPE	UNBRACED SHAFT LENGTH, L_u (FT) [1]	(P2) CAPACITY (KIPS) FOR $2^7/_8$-INCH DIAMETER SHAFTS[7]					
		COMPRESSION (KIPS)			TENSION (KIPS)	LATERAL SHEAR (KIPS)	BENDING MOMENT (KIPS-FT)
		0 Coupler	1 Coupler[2]	2 Couplers[2]			
BARE[5]	0	57.1	57.1	57.1	21.5	14.4	3.99
	5	24.4	13.1	7.1			
	10	12.2	8.5	5.5			
	15	6.5	5.3	3.9			
	20	4.0	3.5	2.9			
GALVANIZED[6]	0	65.5	65.5	65.5	25.8	16.7	4.59
	5	28.1	15.0	8.1			
	10	14.1	9.8	6.3			
	15	7.4	6.0	4.5			
	20	4.6	4.0	3.3			

For **SI**: 1 inch = 25.4 mm; 1 ft = 0.305 m; 1 kip (1000 lbf) = 4.48 kN.

[1]L_u=Total unbraced pile length per IBC Section 1810.2.1, including the length in air, water or in fluid soils, and the embedment length into firm or soft soil (non-fluid soil). k = Effective length factor. kLu = total effective unbraced length of the pile, where kLu = 0 represent a fully braced condition in that the total pile length is fully embedded in firm or soft soil and the supported structure is braced in accordance IBC Section 1810.2.2 . . Helical pile systems used under the IRC as an alternate foundation system supporting structure types listed in 4.1.1 with shafts fully embedded into soil conditions defined in IRC Table R401.4.1 shall be deemed adequate to prevent buckling of the shaft.

[2]Number of couplings within L_u

[3]The capacities shown in Table 3B are for $2^7/_8$-inch-diameter pilings installed with a maximum 1 degree of inclination and the assumption that the pile shaft is concentrically loaded.

[4]Capacities based on two ½-inch bolts with matching nuts installed complying with Section 3.3.3. The bolt threads are excluded from the connection shear plane.

[5]Capacities are based on bare steel losing 0.036-inch (318 µm) steel thickness as indicated in Section 3.9 of AC358 for a 50-year service life.

[6]Capacities are based on galvanized steel losing 0.013-inch (330 µm) steel thickness as indicated in Section 3.9 of AC358 for a 50-year service life.

[7]ASD and LRFD capacities are based on AISC 360.

TABLE 3C— ALLOWABLE (ASD) SHAFT CAPACITY (P2) FOR $3^1/_2$–INCH-DIAMETER PILE WITH COUPLER ECCENTRICITY[3,4] (kips)

STEEL TYPE	UNBRACED SHAFT LENGTH, L_u (FT) [1]	(P2) CAPACITY (KIPS) FOR 3½-INCH DIAMETER SHAFTS[7]					
		COMPRESSION (KIPS)			TENSION (KIPS)	LATERAL SHEAR (KIPS)	BENDING MOMENT (KIPS-FT)
		0 Coupler	1 Coupler[2]	2 Couplers[2]			
BARE[5]	0	58.4	58.4	58.4	22.79	18.5	6.2
	5	34.5	22.3	13.9			
	10	19.6	14.9	10.6			
	15	11.3	9.5	7.5			
	20	7.1	6.3	5.4			
GALVANIZED[6]	0	70.6	70.6	70.6	28.78	21.3	7.12
	5	40.2	26.2	16.3			
	10	22.8	17.5	12.5			
	15	13.0	11.1	8.8			
	20	8.2	7.4	6.3			

For **SI:** 1 inch = 25.4 mm; 1 ft = 0.305 m; 1 kip (1000 lbf) = 4.48 kN.

[1]L_u=Total unbraced pile length per IBC Section 1810.2.1, including the length in air, water or in fluid soils, and the embedment length into firm or soft soil (non-fluid soil). k = Effective length factor. kLu = total effective unbraced length of the pile, where kLu = 0 represent a fully braced condition in that the total pile length is fully embedded in firm or soft soil and the supported structure is braced in accordance IBC Section 1810.2.2. . Helical pile systems used under the IRC as an alternate foundation system supporting structure types listed in 4.1.1 with shafts fully embedded into soil conditions defined in IRC Table R401.4.1 shall be deemed adequate to prevent buckling of the shaft.

[2]Number of couplings within L_u

[3]The capacities shown in Table 3C are for $3^1/_2$-inch-diameter pilings installed with a maximum 1 degree of inclination and the assumption that the pile shaft is concentrically loaded.

[4]Capacities based on three ½-inch bolts with matching nuts installed complying with Section 3.3.3. The bolt threads are excluded from the connection shear plane.

[5]Capacities are based on bare steel losing 0.036-inch (318 µm) steel thickness as indicated in Section 3.9 of AC358 for a 50-year service life.

[6]Capacities are based on galvanized steel losing 0.013-inch (330 µm) steel thickness as indicated in Section 3.9 of AC358 for a 50-year service life.

[7]ASD and LRFD capacities are based on AISC 360.

TABLE 4—HELICAL BEARING PLATE CAPACITY (P3) FOR $2^3/_8$-INCH, $2^7/_8$-INCH and 3½-INCH HELICAL PILES[1,2,3,4]

HELIX DIAM. (IN)	HELICAL PILE					
	$2^3/_8$-INCH		$2^7/_8$-INCH		3½-INCH	
	AXIAL TENSION AND COMPRESSION CAPACITY[3] (P3)(KIPS)					
	ASD	LRFD	ASD	LRFD	ASD	LRFD
9	35.5	53.25	62.72	94.06	48.77	73.13
11	32.5	48.8	60.37	90.53	66.68	99.98
13	38.2	57.3	53.46	80.16	66.93	100.37
15	35.9	53.9	-	-	-	-
17	35.9	53.9	-	-	-	-

For **SI:** 1 inch = 25.4 mm, 1 kip = 4.448 kN.

[1]For helical piles with more than one helix, the allowable helix capacity, P3, for the helical foundation systems, may be taken as the sum of the least allowable capacity of each individual helix.
[2]As described in Section 3.2.2 of this report, all helical bearing plates are made from same material, and have the same edge geometry, thickness and pitch.
[3]Capacities are based on bare steel losing 0.036-inch (318 µm) steel thickness as indicated in Section 3.9 of AC358 for a 50-year service life.
[4]Capacity is based on testing with a safety factor of 2.0 been applied to the ultimate load for ASD capacity or a resistance factor 0.75 is applied to the ultimate load for LRFD capacity.

TABLE 5—SOIL CAPACITY (P4) – AXIAL TENSION AND COMPRESSION FOR $2^7/_8$-INCH AND 3½-INCH HELICAL PILES[1]

GEOTECHNICAL RELATED PROPERTIES	$2^3/_8$-INCH HELICAL PILE		$2^7/_8$-INCH HELICAL PILE		$3^1/_2$-INCH HELICAL PILE	
	Compression	Tension	Compression	Tension	Compression	Tension
Mechanical Torsion Rating (ft-lbs)[3]	2,453	2,453	7,800	7,800	12,570	12,570
Maximum Torque Per Soil Tests (ft-lbs)[4]	2,453	2,453	7,800	7,800	12,570	12,570
Maximum Installation Torque Rating (ft-lbs)[5]	2,453	2,453	7,800	7,800	12,570	12,570
Torque Correlation Factor, K_t (ft^{-1})	10	9.5	9.0	9.0	7.0	7.0
Maximum Ultimate Soil Capacity / Maximum Allowable Soil Capacity (P4) from Torque Correlations (kips)[2]	25.4/12.7	20.4/10.2	70.2/35.1	57/28.5	88/44	69/34.5

For **SI:** 1 foot = 0.305 m, 1 lbf = 4.448 N, 1 lbf-ft = 1.356 N-m.

[1]Soil capacity (P4) must be determined per Section 4.1.5 of this report.
[2]Maximum ultimate soil capacity is determined from $P_{ult} = K_t \times T$ based on the corresponding maximum installation torque rating for the specific pile model. Allowable soil capacity is determined from $Pa = P_{ult}/2.0$ based on the corresponding maximum installation torque rating for the specific pile model. See Section 4.1.5 for additional information.
[3]Mechanical torsion rating is the maximum torsional resistance of the steel shaft.
[4]Maximum Torque Per Soil Tests is the maximum torque achieved during field axial verification testing that was conducted to verify the pile axial capacity related to pile-soil interaction.
[5]Maximum Installation Torque rating is the lower of the “mechanical torsion rating” and the “maximum torque per soil tests”.
[6]The allowable soil capacity under the IRC must be determined in accordance with Equation 3 of Section 4.1.5 of this report, when applicable.

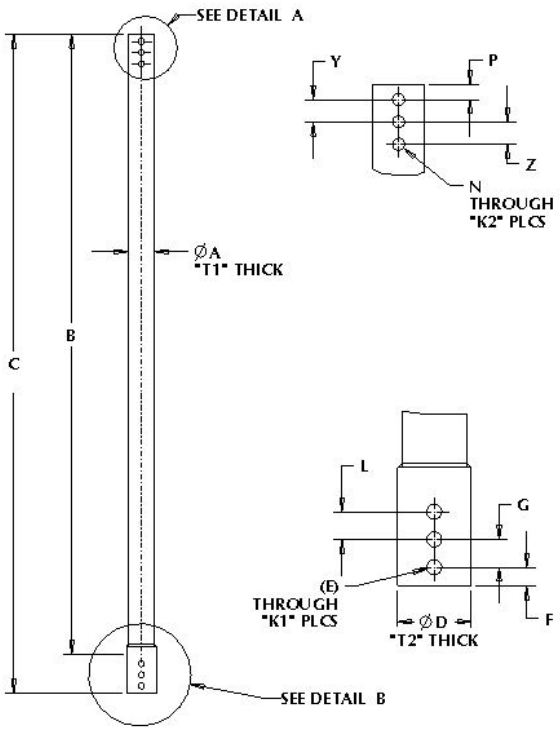

Extensions																
Product Number	A (in)	T1 (in)	B (in)	C (in)	D (in)	E (in)	T2 (in)	K1 (# of Holes)	F (in)	G (in)	L (in)	N (in)	K2 (# of Holes	P (in)	Y (in)	Z (in)
GTEXT2383	2.375	0.154	36	39.5	2.875	0.563	0.1875	2	1.000	1.500	n/a	0.563	2	1.000	1.500	n/a
GTEXT2387	2.375	0.154	84	87.5	2.875	0.563	0.1875	2	1.000	1.500	n/a	0.563	2	1.000	1.500	n/a
GTEXT2783	2.875	0.250	36	39.75	3.500	0.563	0.250	2	1.000	1.500	n/a	0.563	2	1.000	1.500	n/a
GTEXT2787	2.875	0.250	84	87.75	3.500	0.563	0.250	2	1.000	1.500	n/a	0.563	2	1.000	1.500	n/a
GTEXT3123	3.500	0.250	36	41.75	4.000	0.563	0.1875	3	1.000	1.500	1.500	0.563	3	1.000	1.500	1.500
GTEXT3127	3.500	0.250	84	89.75	4.000	0.563	0.1875	3	1.000	1.500	1.500	0.563	3	1.000	1.500	1.500

FIGURE 1A—EXTENSION SECTIONS

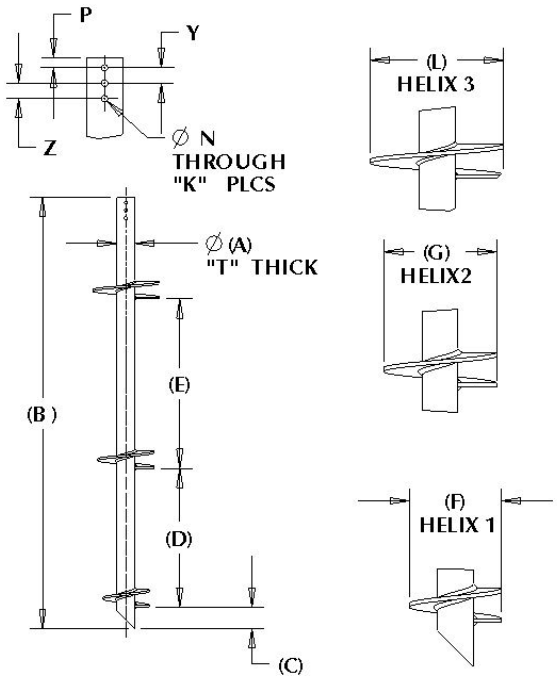

Lead Sections															
Product Number	A (in)	T (in)	B (in)	C (in)	D (in)	E (in)	F (in)	G (in)	L (in)	N (in)	K (# of Holes)	P (in)	Y (in)	Z (in)	Helix Thick (in)
GTP23809	2.375	0.154	84	4.500	n/a	n/a	9	n/a	n/a	0.563	2	1.000	1.500	n/a	0.375
GTP23811	2.375	0.154	84	4.500	n/a	n/a	11	n/a	n/a	0.563	2	1.000	1.500	n/a	0.375
GTP23813	2.375	0.154	84	4.500	n/a	n/a	13	n/a	n/a	0.563	2	1.000	1.500	n/a	0.375
GTP23815	2.375	0.154	84	4.500	n/a	n/a	15	n/a	n/a	0.563	2	1.000	1.500	n/a	0.375
GTP23817	2.375	0.154	84	4.500	n/a	n/a	17	n/a	n/a	0.563	2	1.000	1.500	n/a	0.375
GTP27809	2.875	0.250	84	4.500	n/a	n/a	9	n/a	n/a	0.563	2	1.000	1.500	n/a	0.375
GTP27811	2.875	0.250	84	4.500	n/a	n/a	11	n/a	n/a	0.563	2	1.000	1.500	n/a	0.375
GTP27813	2.875	0.250	84	4.500	n/a	n/a	13	n/a	n/a	0.563	2	1.000	1.500	n/a	0.375
GTP2780911	2.875	0.250	84	4.500	27	n/a	9	11	n/a	0.563	2	1.000	1.500	n/a	0.375
GTP2781113	2.875	0.250	84	4.500	33	n/a	11	13	n/a	0.563	2	1.000	1.500	n/a	0.375
GTP278091113	2.875	0.250	84	4.500	27	33	9	11	13	0.563	2	1.000	1.500	n/a	0.375
GTP931209	3.500	0.250	84	4.500	n/a	n/a	9	n/a	n/a	0.563	3	1.000	1.500	1.500	0.375
GTP31211	3.500	0.250	84	4.500	n/a	n/a	11	n/a	n/a	0.563	3	1.000	1.500	1.500	0.375
GTP31213	3.500	0.250	84	4.500	n/a	n/a	13	n/a	n/a	0.563	3	1.000	1.500	1.500	0.375
GTP3120911	3.500	0.250	84	4.500	27	n/a	9	11	n/a	0.563	3	1.000	1.500	1.500	0.375
GTP3121113	3.500	0.250	84	4.500	33	n/a	11	13	n/a	0.563	3	1.000	1.500	1.500	0.375
GTP312091113	3.500	0.250	84	4.500	27	33	9	11	13	0.563	3	1.000	1.500	1.500	0.375

FIGURE 1B—HELICAL PILE LEAD SECTIONS

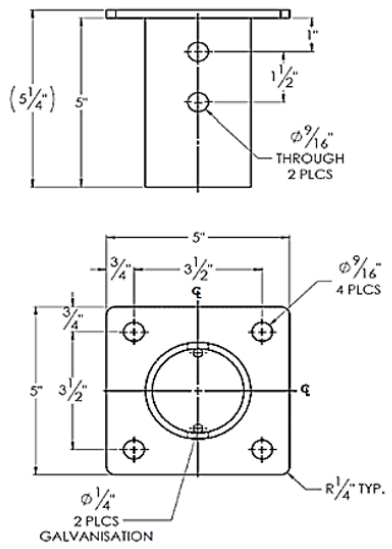

GTBRST238-5X5-LS
GTBRST238-5X5-LS-N

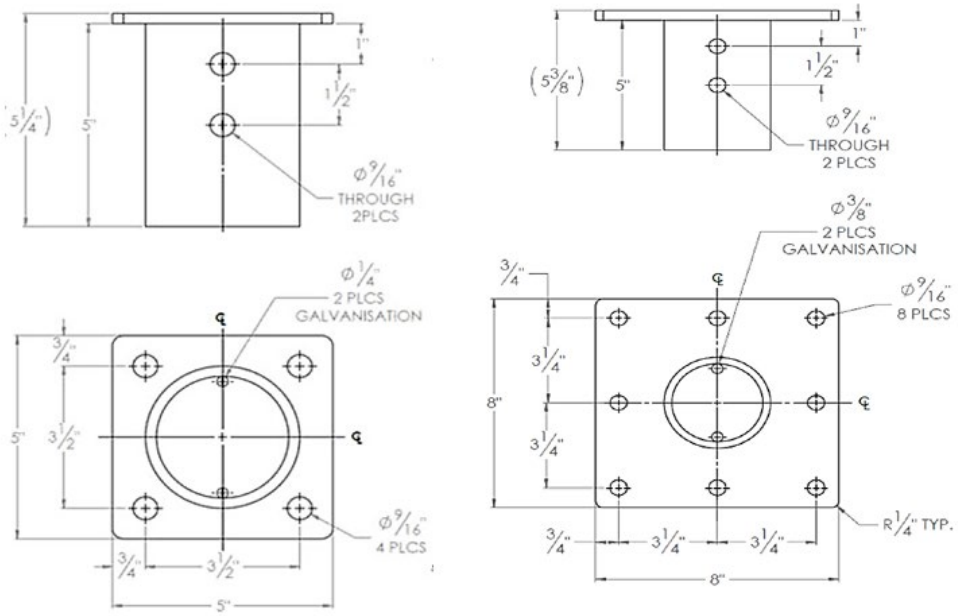

GTBRST278-5X5
GTBRST278-5X5-N

GTBRST278-8X8
GTBRST278-8X8-N

FIGURE 2—NEW CONSTRUCTION BRACKETS (TYPICAL DETAILS FOR GTBRST238, GTBRST278 AND GTBRST312)

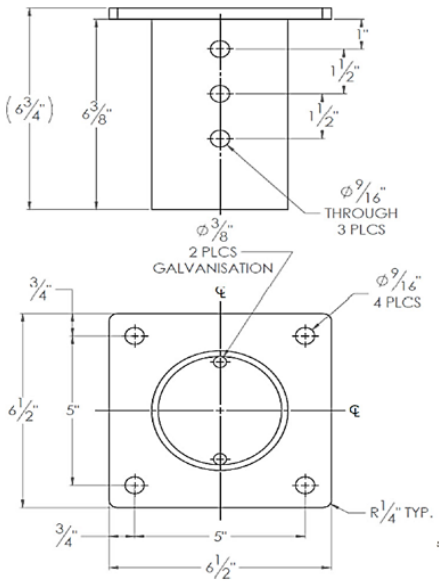

GTBRST312-6.5X6.5
GTBRST312-6.5X6.5-N

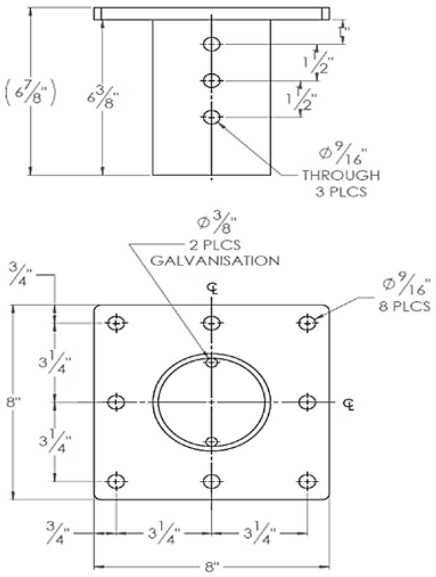

GTBRST312-8X8
GTBRST312-8X8-N

FIGURE 2—NEW CONSTRUCTION BRACKETS (TYPICAL DETAILS FOR GTBRST238, GTBRST278 AND GTBRST312)-continued

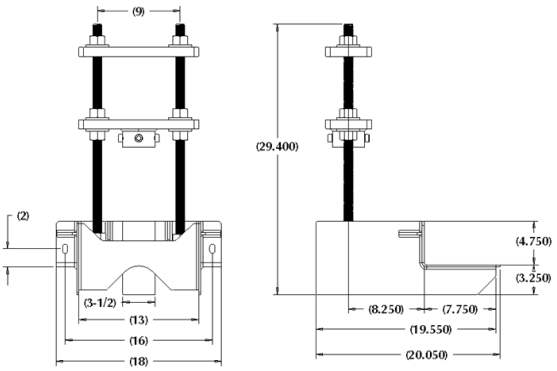

GTUP278
GTUP278-N

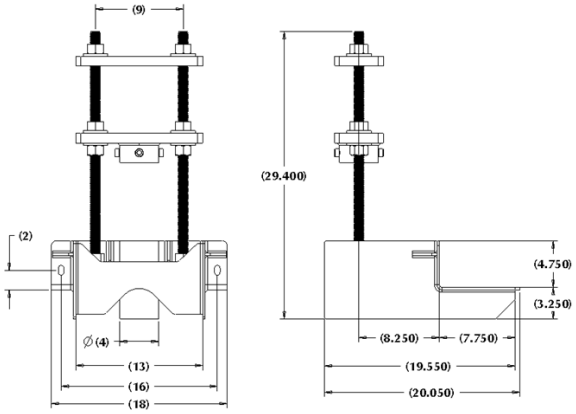

GTUP312
GTUP312-N

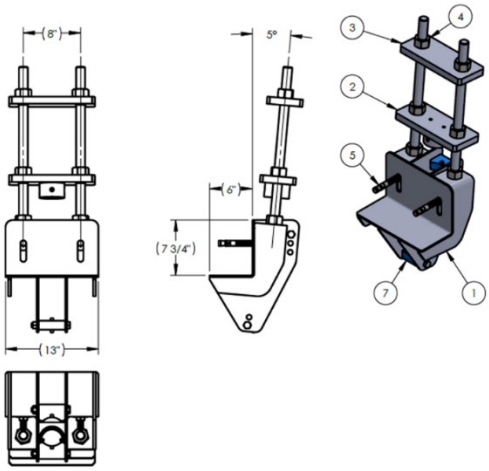

NO. ARTICLE	NUMERO DE PIECE	DESCRIPTION	QTE
1	GTUPHC	UP ASSY FOR GTUP278HC AND GTUP312HC	1
2	GTUPBASEPLATE278HC	STABILIZER PLATE ASSY. + BOLT KIT	1
3	GTUPJACKPLATEHC	1" RE-USABLE PLATE TO HOLD HYDRAULIC JACK FOR UNDERPINNING BRACKETS	1
4	GANUT1-25-DH	NUT 1 1/4"-7 UNC ASTM A563 DH GALVANISÉE	2
5	GA0150123	HILTY WEDGE ANCHOR KB-TZ2, 3/4" DIA 7" LENGTH OR EQUIVALENT (0150123 : FASTENAL)	2
7	GTUPBLOCK278HC	PLATE ASSY. UNDERPINNING BRACKET 2 7/8"	2

GTUPHC278
GTUPHC278-N

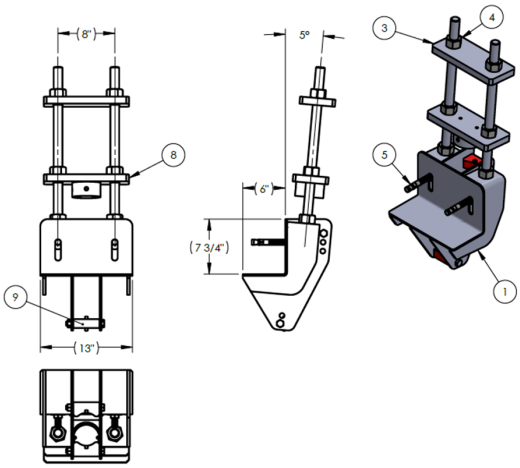

NO. ARTICLE	NUMERO DE PIECE	DESCRIPTION	QTE
1	GTUPHC	UP ASSY FOR GTUP278HC AND GTUP312HC	1
3	GTUPJACKPLATEHC	1" RE-USABLE PLATE TO HOLD HYDRAULIC JACK FOR UNDERPINNING BRACKETS	1
4	GANUT1-25-DH	NUT 1 1/4"-7 UNC ASTM A563 DH GALVANISÉE	2
5	GA0150123	HILTY WEDGE ANCHOR KB-TZ2, 3/4" DIA 7" LENGTH OR EQUIVALENT (0150123 : FASTENAL)	2
8	GTUPBASEPLATE312HC	PLATE ASSY. UNDERPINNING BRACKET 3 1/2"	1
9	GTUPBLOCK312HC	STABILIZER PLATE ASSY. + BOLT KIT	2

GTUPHC312
GTUPHC312-N

FIGURE 3—UNDERPINNING BRACKETS

DIVISION: 31 00 00—EARTHWORK
Section: 31 63 00—Bored Piles

REPORT HOLDER:

GOLIATHTECH INCORPORATED

EVALUATION SUBJECT:

GOLIATHTECH HELICAL PILE SYSTEMS

1.0 REPORT PURPOSE AND SCOPE

Purpose:

The purpose of this evaluation report supplement is to indicate that the GoliathTech Helical Pile Systems with 3½-inch (89 mm) outside diameter lead and extension shafts (referred hereafter as 3½-inch GoliathTech Helical Pile Systems), described in ICC-ES evaluation report ESR-3726, have also been evaluated for compliance with the Chicago Construction Code (Title 14 of the Chicago Municipal Code) as noted below.

Applicable code edition:

- 2019 *Chicago Building Code* (Title 14B)

2.0 CONCLUSIONS

In accordance with Section 1810.3.5.3.5 of Title 14B, only the 3½-inch GoliathTech Helical Pile Systems, described in Sections 2.0 through 7.0 of the evaluation report ESR-3726, comply with Title 14B. These are subject to the conditions of use described in this supplement.

3.0 CONDITIONS OF USE

The 3½-inch GoliathTech Helical Pile Systems described in this evaluation report supplement must comply with all of the following conditions:

- All applicable sections in the evaluation report ESR-3726.
- The design, installation, conditions of use and identification of the 3½-inch GoliathTech Helical Pile Systems must be in accordance with the 2018 *International Building Code®* (IBC) provisions noted in the evaluation report ESR-3726, with the following modifications:
  1. The allowable (ASD) shaft capacity (P2) for 3½-inch diameter pile in Tables 3C of ESR-3726, must be replaced with the following (based on Table 1810.3.2.6 of Title 14B), for Case A[8]:

STEEL TYPE	UNBRACED SHAFT LENGTH, L_u (FT)[1]	(P2) CAPACITY (KIPS) FOR 3½-INCH DIAMETER SHAFTS[3,4,7]			
		COMPRESSION (KIPS)			TENSION (KIPS)
		0 Coupler	1 Coupler[2]	2 Couplers[2]	
BARE[5]	0	58.4	50.05	50.05	22.79
	5	34.50	22.34	13.87	
	10	19.56	14.95	10.61	
	15	11.12	9.46	7.52	
	20	7.02	6.32	5.39	
	0	69.44	60.51	60.51	

ICC-ES Evaluation Reports are not to be construed as representing aesthetics or any other attributes not specifically addressed, nor are they to be construed as an endorsement of the subject of the report or a recommendation for its use. There is no warranty by ICC Evaluation Service, LLC, express or implied, as to any finding or other matter in this report, or as to any product covered by the report.

Copyright © 2026 ICC Evaluation Service, LLC. All rights reserved.

GALVANIZED[6]	5	40.20	26.20	16.35	28.78
	10	22.85	17.53	12.49	
	15	12.96	11.06	8.82	
	20	8.16	7.36	6.29	

For **SI:** 1 inch = 25.4 mm; 1 ft = 0.305 m; 1 kip (1000 lbf) = 4.48 kN.

[1]L_u=Total unbraced pile length per IBC Section 1810.2.1, including the length in air, water or in fluid soils, and the embedment length into firm or soft soil (non-fluid soil). k = Effective length factor. kL_u = total effective unbraced length of the pile, where kL_u = 0 represent a fully braced condition in that the total pile length is fully embedded in firm or soft soil and the supported structure is braced in accordance IBC Section 1810.2.2.
[2]Number of couplings within L_u
[3]The capacities shown are for 3$^1/_2$-inch-diameter pilings installed with a maximum 1 degree of inclination and the assumption that the pile shaft is concentrically loaded.
[4]Capacities based on three ½-inch bolts with matching nuts installed complying with Section 3.3.3 of ESR-3726. The bolt threads are excluded from the connection shear plane.
[5]Capacities are based on bare steel losing 0.036-inch (318 µm) steel thickness as indicated in Section 3.9 of AC358 for a 50-year service life.
[6]Capacities are based on galvanized steel losing 0.013-inch (330 µm) steel thickness as indicated in Section 3.9 of AC358 for a 50-year service life.
[7]ASD capacities are based on AISC 360.
[8]For **Case A** to apply, the site specific project must meet the provisions of Sections 1810.3.2.8 of Title 14B. Otherwise, Case B should apply.

2. The allowable (ASD) shaft capacity (P2) for 3½-inch diameter pile in Tables 3C of ESR-3726, must be replaced with the following (based on Table 1810.3.2.6 of Title 14B), for Case B[8]:

STEEL TYPE	**UNBRACED SHAFT LENGTH, L_u (FT)[1]**	**(P2) CAPACITY (KIPS) FOR 3½-INCH DIAMETER SHAFTS[3,4,7]**			
		COMPRESSION (KIPS)			**TENSION (KIPS)**
		0 Coupler	**1 Coupler[2]**	**2 Couplers[2]**	
BARE[5]	0	32.27	26.70	26.70	22.79
	5	32.27	22.34	13.87	
	10	19.56	14.95	10.61	
	15	11.12	9.46	7.52	
	20	7.02	6.32	5.39	
GALVANIZED[6]	0	37.04	32.27	32.27	28.78
	5	37.04	26.20	16.35	
	10	22.85	17.53	11.06	
	15	12.96	11.06	8.82	
	20	8.16	7.36	6.92	

For **SI:** 1 inch = 25.4 mm; 1 ft = 0.305 m; 1 kip (1000 lbf) = 4.48 kN.

[1]L_u=Total unbraced pile length per IBC Section 1810.2.1, including the length in air, water or in fluid soils, and the embedment length into firm or soft soil (non-fluid soil). k = Effective length factor. kLu = total effective unbraced length of the pile, where kLu = 0 represent a fully braced condition in that the total pile length is fully embedded in firm or soft soil and the supported structure is braced in accordance IBC Section 1810.2.2.
[2]Number of couplings within L_u
[3]The capacities shown are for 3$^1/_2$-inch-diameter pilings installed with a maximum 1 degree of inclination and the assumption that the pile shaft is concentrically loaded.
[4]Capacities based on three ½-inch bolts with matching nuts installed complying with Section 3.3.3 oe ESR-3726. The bolt threads are excluded from the connection shear plane.
[5]Capacities are based on bare steel losing 0.036-inch (318 µm) steel thickness as indicated in Section 3.9 of AC358 for a 50-year service life.
[6]Capacities are based on galvanized steel losing 0.013-inch (330 µm) steel thickness as indicated in Section 3.9 of AC358 for a 50-year service life.
[7]ASD capacities are based on AISC 360.
[8]**Case B** applies if no justification was provided in accordance with Section 1810.3.2.8 of Title 14.

3. Where Sections 2.0 through 7.0 of ESR-3726 refer to a registered design professional, this must be a registered geotechnical consultant, as defined in the Chicago Construction Codes Administrative Provisions (Title 14A).

4. Where required, a report of geotechnical investigation must be submitted as part of the documentation required by Section 14A-4-411.1 of Title 14A.

- Evaluation of helical foundation systems subjected to corrosive environment, addressed in Section 1810.3.2.5.1 of Title 14B, is outside the scope of this evaluation report supplement.

- The design, installation and inspection are in accordance with additional requirements of Chapters 16, 17, and 18 of Title 14B, as applicable.

This supplement expires concurrently with the evaluation report, reissued October 2026.

DIVISION: 31 00 00—EARTHWORK
Section: 31 63 00—Bored Piles

REPORT HOLDER:

GOLIATHTECH INCORPORATED

EVALUATION SUBJECT:

GOLIATHTECH HELICAL PILE SYSTEMS

1.0 REPORT PURPOSE AND SCOPE

Purpose:

The purpose of this evaluation report supplement is to indicate that the GoliathTech Helical Pile Systems, described in ICC-ES evaluation report ESR-3726, have also been evaluated for compliance with the codes noted below as adopted by the Los Angeles Department of Building and Safety (LADBS).

Applicable code editions:

- 2023 *City of Los Angeles Building Code (LABC)*
- 2023 *City of Los Angeles Residential Code (LARC)*

2.0 CONCLUSIONS

The GoliathTech Helical Pile Systems, described in Sections 2.0 through 7.0 of the evaluation report ESR-3726, comply with the LABC Section 1810, and the LARC, and are subject to the conditions of use described in this supplement.

3.0 CONDITIONS OF USE

The GoliathTech Helical Pile Systems described in this evaluation report supplement must comply with all of the following conditions:

- All applicable sections in the evaluation report ESR-3726.
- The design, installation, conditions of use and identification of the helical pile systems are in accordance with the 2021 *International Building Code®* (IBC) provisions noted in the evaluation report ESR-3726.
- The design, installation, and inspection are in accordance with additional requirements of LABC Chapters 16 and 17, Sections 1803 and 1810.3.1.5, as applicable.
- The GoliathTech Helical Pile Systems may be used in new construction and to resist horizontal loads as an exception to LABC Section 1810.3.1.5, provided the following conditions are met:
    - The GoliathTech Helical Pile Systems must comply with the provisions in ESR-3726 that apply to installation in Seismic Design Categories D, E and F.
    - A soil investication report as required by LABC Section 1803.1 must be submitted to the Los Angeles Department of Building and Safety Grading Division for review and approval for each site where helical piles are being installed.
    - For installation of helical piles under LABC covered structures, axial and lateral (where used) capacities of helical piles shall be determined in accordance with LABC Section 1810.3.3 by at least two project specific preproduction tests for each soil profile, size and depth of helical pile. At least two percent of all production piles shall be proof tested to the design strength, determined by using load combinations in LABC Section 1605.2.
    - For installation of helical piles under LARC covered structures, axial and lateral (where used) capacities of helical piles shall be determined in accordance with LABC Section 1810.3.3 by at least one project specific preproduction test for each soil profile, size and depth of helical pile. At least two percent of all production piles shall be proof tested to the design strength, determined by using load combinations in LABC Section 1605.2.

ICC-ES Evaluation Reports are not to be construed as representing aesthetics or any other attributes not specifically addressed, nor are they to be construed as an endorsement of the subject of the report or a recommendation for its use. There is no warranty by ICC Evaluation Service, LLC, express or implied, as to any finding or other matter in this report, or as to any product covered by the report.

Copyright © 2026 ICC Evaluation Service, LLC. All rights reserved.

- Helical piles installation shall be performed under the inspection and approval of the soils engineer and the continuous inspection and approval of the deputy grading inspector. The information recorded shall include installation equipment used, pile dimensions, tip elevations, final depth, final installation torque and other pertinent installation data as required by soils engineer.
- Helical piles shall satisfy corrosion resistance requirements of AC358. In addition, all helical piles materials that are subject to corrosion shall include at least 1/16-inch corrosion allowance.
- The allowable axial design load must comply with LABC Section 1810.3.3.1.9.
- The allowable lateral load must comply with ESR-3726. The seismic demand force must not exceed the allowable lateral load reported in ESR-3726.

- Under the LARC, an engineered design in accordance with LARC Section R301.1.3 must be submitted.

This supplement expires concurrently with the evaluation report, reissued October 2026.

DIVISION: 31 00 00—EARTHWORK
Section: 31 63 00—Bored Piles

REPORT HOLDER:

GOLIATHTECH INCORPORATED

EVALUATION SUBJECT:

GOLIATHTECH HELICAL PILE SYSTEMS

1.0 REPORT PURPOSE AND SCOPE

Purpose:

The purpose of this evaluation report supplement is to indicate that the GoliathTech Helical Pile Systems, described in ICC-ES evaluation report ESR-3726, have also been evaluated for compliance with the code noted below as adopted by the New York City Department of Buildings.

Applicable code edition:

2022 *City of New York Building Code* (NYCBC)

2.0 CONCLUSIONS

The GoliathTech Helical Pile Systems, described in Sections 2.0 through 7.0 of the evaluation report ESR-3726, comply with the NYCBC Section 1814 and is subject to the conditions of use described in this supplement.

3.0 CONDITIONS OF USE

The GoliathTech Helical Pile Systems described in this evaluation report must comply with all of the following conditions:

- All applicable sections in the evaluation report ESR-3726.
- The design, installation, conditions of use and identification of the helical pile systems are in accordance with the 2015 *International Building Code®* (2015 IBC) provisions noted in the evaluation report ESR-3726.
- The design, installation, and inspection are in accordance with additional requirements of NYCBC Chapters 16 and 17 and Section BC 1814, as applicable.
- The GoliathTech Helical Pile Systems axial tension and compression load shall not exceed 30 tons (60 kips).
- The GoliathTech Helical Pile Systems lateral load shall not exceed 3 tons (6 kips).
- The GoliathTech Helical Pile Systems installer shall be recommended by the manufacturer and possess a minimum of three years of experience in the installation of helical piles.
- The installation of helical piles shall be subject to the special inspection requirements pursuant to sections BC 1705.9 and BC 1814.12.
- After satisfactory completion of the helical pile inspections, the special inspector shall submit a “TR5H Form” in accordance with section BC 1704.1.1.2
- Field welds performed in the installation of the helical pile foundation system, are subject to the special inspection requirements of sections BC 1705.2.

This supplement expires concurrently with the evaluation report, reissued October 2026.

ICC-ES Evaluation Reports are not to be construed as representing aesthetics or any other attributes not specifically addressed, nor are they to be construed as an endorsement of the subject of the report or a recommendation for its use. There is no warranty by ICC Evaluation Service, LLC, express or implied, as to any finding or other matter in this report, or as to any product covered by the report.

Copyright © 2026 ICC Evaluation Service, LLC. All rights reserved.

DIVISION: 31 00 00—EARTHWORK
Section: 31 63 00—Bored Piles

REPORT HOLDER:

GOLIATHTECH INCORPORATED

EVALUATION SUBJECT:

GOLIATHTECH HELICAL PILE SYSTEMS

1.0 REPORT PURPOSE AND SCOPE

Purpose:

The purpose of this evaluation report supplement is to indicate that the GoliathTech Helical Pile Systems, described in ICC-ES evaluation report ESR-3726, have also been evaluated for compliance with the codes noted below.

Applicable code editions:

- 2022 *California Building Code* (CBC)

For evaluation of applicable chapters adopted by the California Office of Statewide Health Planning and Development (OSHPD) AKA: California Department of Health Care Access and Information (HCAI) and the Division of State Architect (DSA), see Sections 2.1.1 and 2.1.2 below.

- 2022 *California Residential Code* (CRC)

2.0 CONCLUSIONS

2.1 CBC:

The GoliathTech Helical Pile Systems, described in Sections 2.0 through 7.0 of the evaluation report ESR-3726, comply with CBC Chapter 18, provided the design and installation are in accordance with the 2021 *International Building Code*® (IBC) provisions noted in the evaluation report and the additional requirements of CBC Chapters 16, 17 and 18, as applicable.

2.1.1 OSHPD:

The applicable OSHPD Sections and Chapters of the CBC are beyond the scope of this supplement.

2.1.2 DSA:

The applicable DSA Sections and Chapters of the CBC are beyond the scope of this supplement.

2.2 CRC:

The GoliathTech Helical Pile Systems, described in Sections 2.0 through 7.0 of the evaluation report ESR-3726, comply with the CRC Chapter 3, provided the design and installation are in accordance with the 2021 *International Residential Code*® (IRC) provisions noted in the evaluation report.

This supplement expires concurrently with the evaluation report, reissued October 2026.

ICC-ES Evaluation Reports are not to be construed as representing aesthetics or any other attributes not specifically addressed, nor are they to be construed as an endorsement of the subject of the report or a recommendation for its use. There is no warranty by ICC Evaluation Service, LLC, express or implied, as to any finding or other matter in this report, or as to any product covered by the report.

Copyright © 2026 ICC Evaluation Service, LLC. All rights reserved.

DIVISION: 31 00 00—EARTHWORK
Section: 31 63 00—Bored Piles

REPORT HOLDER:

GOLIATHTECH INCORPORATED

EVALUATION SUBJECT:

GOLIATHTECH HELICAL PILE SYSTEMS

1.0 REPORT PURPOSE AND SCOPE

Purpose:

The purpose of this evaluation report supplement is to indicate that the GoliathTech Helical Pile Systems, described in ICC-ES evaluation report ESR-3726, have also been evaluated for compliance with the codes noted below.

Applicable code editions:

- 2023 *Florida Building Code—Building*
- 2023 *Florida Building* Code—*Residential*

2.0 CONCLUSIONS

The GoliathTech Helical Pile Systems, described in Sections 2.0 through 7.0 of the evaluation report ESR-3726, comply with the *Florida Building Code—Building* and *Florida Building Code—Residential*. The design requirements must be determined in accordance with the *Florida Building Code—Building* or *Florida Building Code—Residential*, as applicable. The installation requirements noted in ICC-ES evaluation report ESR-3726 for the 2021 *International Building Code®* meet the requirements of the *Florida Building Code—Building* or *Florida Building Code—Residential*, as applicable.

Use of the GoliathTech Helical Pile Systems for compliance with the High-Velocity Hurricane Zone provisions of the *Florida Building Code—Building* or *Florida Building Code—Residential* has not been evaluated and is outside the scope of this supplemental report.

For products falling under Florida Rule 61G20-3, verification that the report holder's quality assurance program is audited by a quality assurance entity approved by the Florida Building Commission for the type of inspections being conducted is the responsibility of an approved validation entity (or the code official when the report holder does not possess an approval by the Commission). Florida Rule 61G20-3 is applicable to products and/or systems which comprise the building envelope and structural frame for compliance with the structural requirements of the Florida Building Code.

This supplement expires concurrently with the evaluation report, reissued October 2026.

ICC-ES Evaluation Reports are not to be construed as representing aesthetics or any other attributes not specifically addressed, nor are they to be construed as an endorsement of the subject of the report or a recommendation for its use. There is no warranty by ICC Evaluation Service, LLC, express or implied, as to any finding or other matter in this report, or as to any product covered by the report.

Copyright © 2026 ICC Evaluation Service, LLC. All rights reserved.

DIVISION: 31 00 00—EARTHWORK
Section: 31 63 00—Bored Piles

REPORT HOLDER:

GOLIATHTECH INCORPORATED

EVALUATION SUBJECT:

GOLIATHTECH HELICAL PILE SYSTEMS

1.0 REPORT PURPOSE AND SCOPE

Purpose:

The purpose of this evaluation report supplement is to indicate that the GoliathTech Helical Pile Systems, described in ICC-ES evaluation report ESR-3726, have also been evaluated for compliance with the codes noted below.

Applicable code editions:

- 2022 Oregon Structural Specialty Code *(OSSC)*

2.0 CONCLUSIONS

The GoliathTech Helical Pile Systems, described in Sections 2.0 through 7.0 of the ICC-ES evaluation report ESR-3726, comply with the OSSC Section 1810, and are subject to the conditions of use described in this supplement.

3.0 CONDITIONS OF USE

The GoliathTech Helical Pile Systems described in this evaluation report supplement must comply with all of the following conditions:

- All applicable sections in the evaluation report ESR-3726.
- The design, installation, conditions of use and identification of the helical pile systems are in accordance with the 2021 *International Building Code®* (IBC) provisions noted in the ICC-ES evaluation report ESR-3726.
- The design, installation and inspection are in accordance with additional requirements of OSSC Chapters 16,17, and 18, as applicable.

This supplement expires concurrently with the evaluation report, reissued October 2026.

ICC-ES Evaluation Reports are not to be construed as representing aesthetics or any other attributes not specifically addressed, nor are they to be construed as an endorsement of the subject of the report or a recommendation for its use. There is no warranty by ICC Evaluation Service, LLC, express or implied, as to any finding or other matter in this report, or as to any product covered by the report.

Copyright © 2026 ICC Evaluation Service, LLC. All rights reserved.